Innovation in Motion
TSUBAKI

TSUBAKI
ZIP CHAIN ACTUATOR®

Meshing chain linear motion

ZIP CHAIN ACTUATOR®

PATENTED

The ability to store Zip Chains in a compact case helps save overall space compared with conventional linear actuators. With support for high-speed, high-frequency operation, Zip Chain Actuators consume significantly less power than hydraulic/pneumatic cylinders. Multi-point stopping at high precision is also possible, and installation direction is not limited.

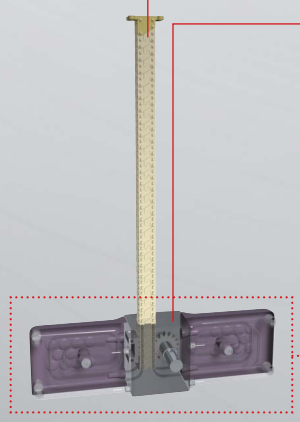

Zip Chain End fitting

End fitting is integrated with the Zip Chain.
This enables mounting from lifting or suspending.

Drive section

The engagement of the Zip Chain and Tsubaki's special sprocket ensures sufficient power transmission.

Housing section

The sliding parts used on the chain facilitate smooth storage in a compact chain case.

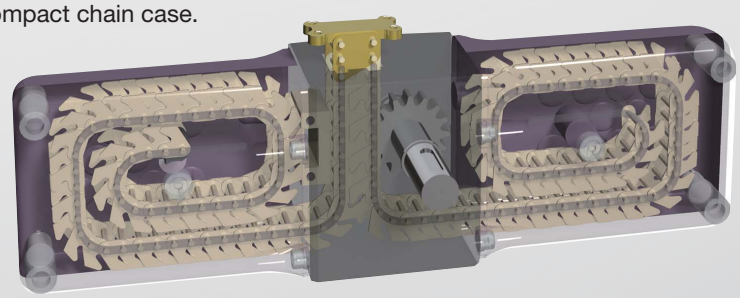

Features

Compact design

The height of the chain case is about 1/10 lower than the stroke, and with its drive-integrated structure this compact unit can be installed in narrow spaces.

Up to 90% smaller than the stroke

- Model: ZCA45M200EL040H60
- Pneumatic cylinder
- Hydraulic cylinder

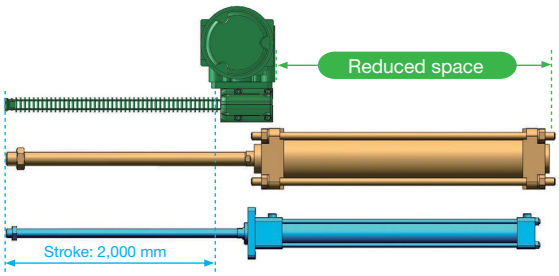

High speed

Achieves a maximum speed of 1,000mm/sec during high speed operation, which far outstrips the speeds seen in screw type cylinders and hydraulic/pneumatic cylinders.

Maximum speed
1,000mm/sec

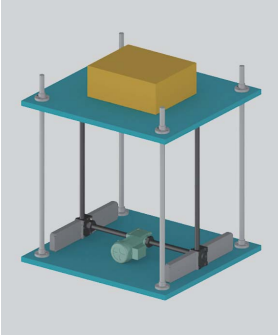

Multi-point stopping

Servo motors enable high precision multi-point stopping and continuous operation.

Duty factor
100%ED

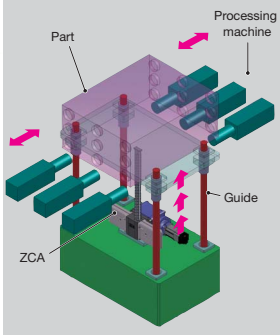

Longer life

Features superb wear resistance and less chain elongation, which gives it an expected travel distance of 4,000 km.

Expected travel distance
4,000km

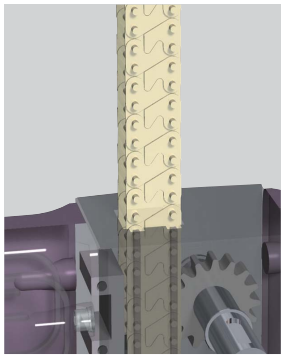

Installation in any direction

Can be freely installed in any direction to meet any customer need, such as lifting, horizontal movement, and suspending.

*** Be sure to always install a linear guide along the direction of travel.**

No limitation
on installation direction

Product lineup

With hypoid motor

Zip Chain Actuators with hypoid motors are available in any size. The reduced number of parts allows for easy assembly/selection.

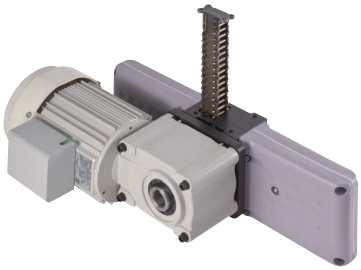

With Tsubaki TERVO reducer for servomotors

Enables a compact structure and high-speed positioning with servo motors.

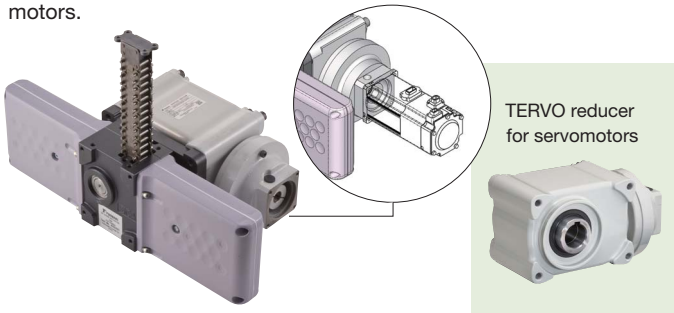

APPLICATIONS

Compact design ideal for low height application and saving space

The compact structure of the ZIP CHAIN ACTUATOR® enables various installation options—including lifting, horizontal, and suspending installation.
Use for a wide range of applications requiring linear operation.

Pallet transfer device

High speed
High frequency
Compact

Workpieces are raised and lowered for transferring using an arm powered by the Zip Chain Actuator.

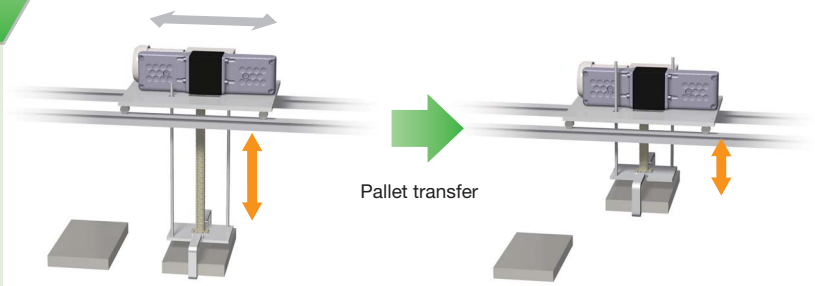

Benefit

- Can be installed in the small space on the ceiling side.
- Reduces the cycle time for conveyance by allowing for lifting at high speed

Parts tray lift

Compact
Multi-point stopping

Part trays are sequentially processed on the conveyor.

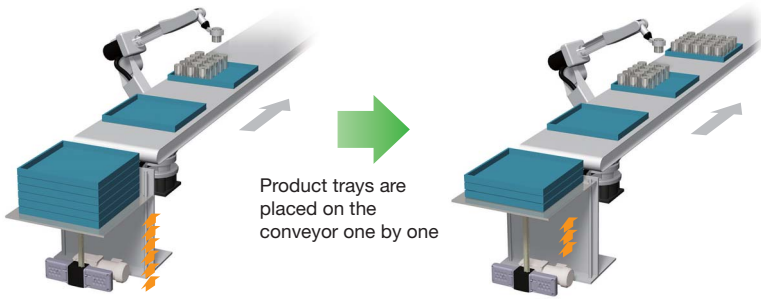

Benefit

- Large number of trays can be stacked since it is low to the floor and compact.
- Highly accurate multi-point stopping at any desired position means it can handle trays of various heights.

Furnace door

High speed
Compact
Economical

Zip Chain Actuators can be used to push up and close furnace doors.

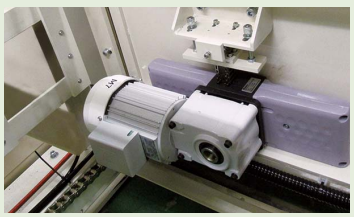

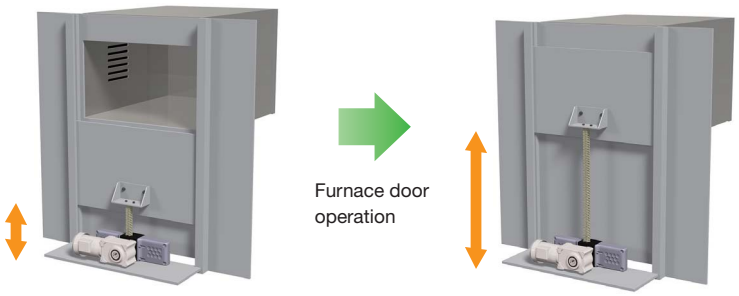

Benefit

- Can be installed without protruding from the equipment.
- Higher speed operation prevents temperatures inside the furnace from changing.
- Environmentally friendly with less noise compared to pneumatic cylinders, and no oil mist

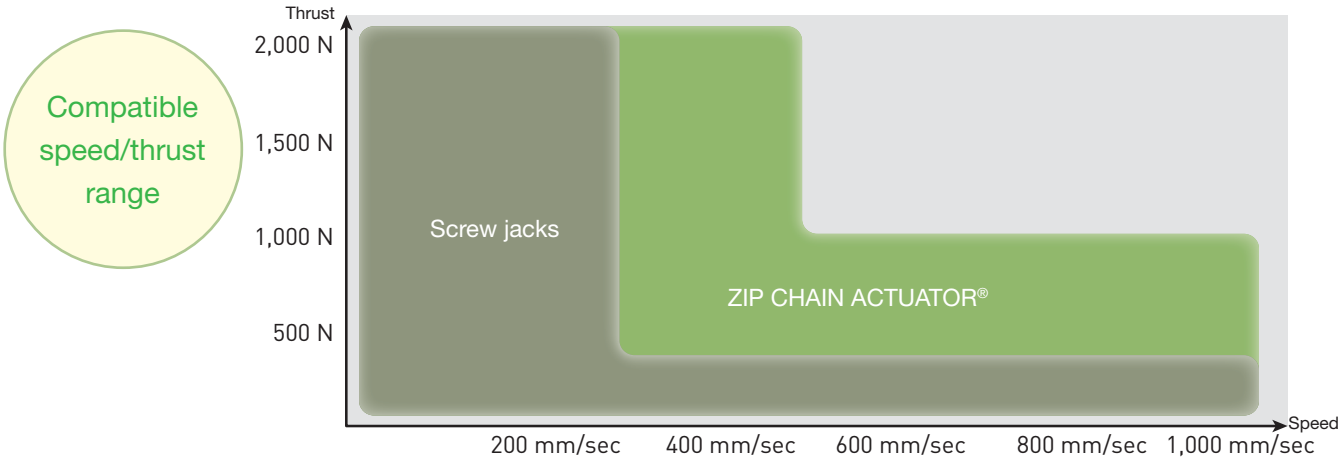

Container sorting equipment

High speed

Compact

Zip Chain Actuators can be used to move traversers horizontally and to raise or lower chucking units vertically.

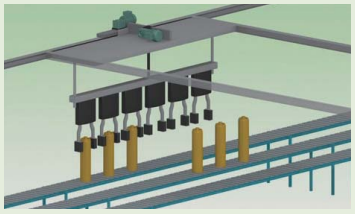

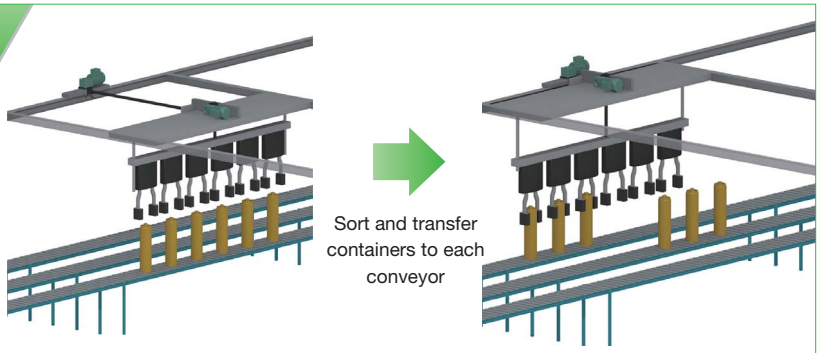

Benefit

- Horizontal and suspending installation are possible without protruding parts, enabling a lower height layout
- Accurate multi-point stopping even with horizontal transfers

High lifting equipment

High speed

Compact

Workpieces on a lower conveyor can be pushed up to an upper conveyor using the Zip Chain Actuator.

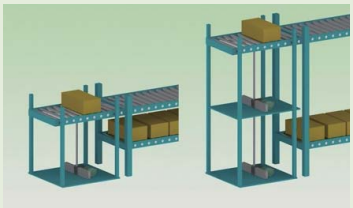

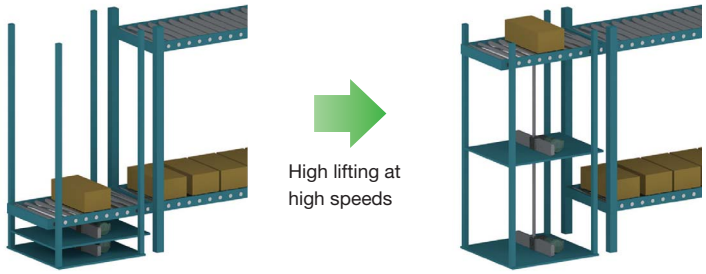

Benefit

- Users can arrange two units in tandem when the required stroke for one unit is not enough. Furthermore, lift speed will double when operating two units at the same time.
- Can be installed compactly, even with two units overlapping

AGV (Automated Guided Vehicle)

Compact

High precision

Workpieces are transferred between conveyors at different heights using the Zip Chain Actuator mounted on AGV.

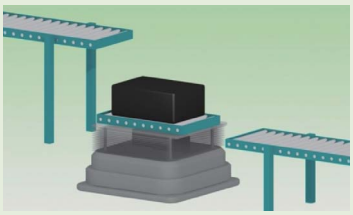

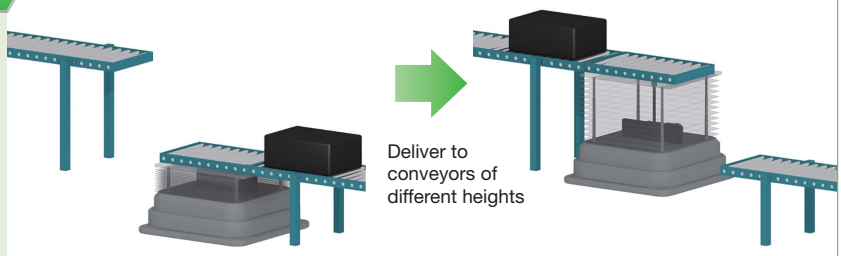

Benefit

- Lift unit can be accommodated compactly in the AGV
- Height can be adjusted according to the conveyor height of the next process

Conversion From Hydraulic/Pneumatic Mechanisms

Compared with hydraulic and pneumatic drive systems, motorized models are environmentally friendly with a simple design, and easy to maintain while providing significantly improved performance.

Eco-friendly

LCA-approved ZIP CHAIN ACTUATOR®

Tsubaki Zip Chain Actuators offer significantly reduced power consumption compared to hydraulic and pneumatic cylinders. These environmentally friendly linear motion devices have been recognized for their power-saving effectiveness.

What is LCA?

Life Cycle Assessment

Life Cycle Assessment is a comprehensive method for evaluating the environmental impact at all stages, including manufacturing, operation, and disposal.

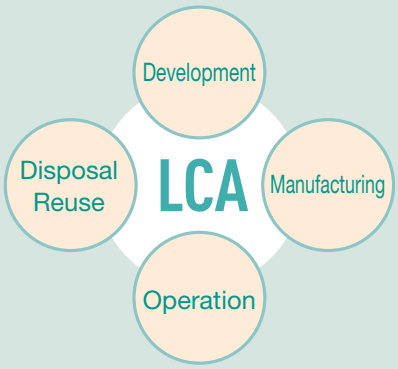

Comparing with hydraulic and pneumatic cylinders

* Calculated using Tsubaki's internal LCA evaluation.

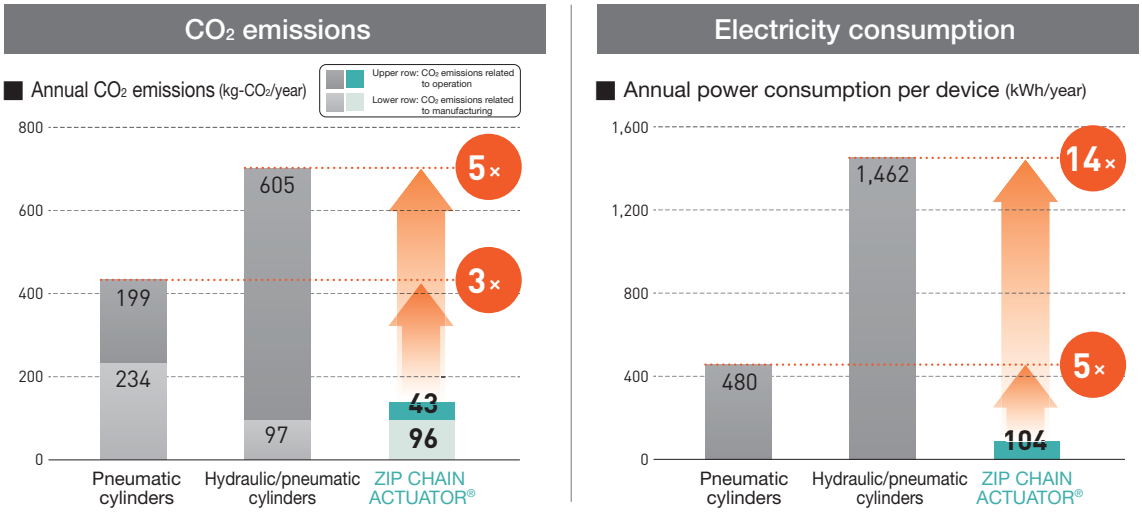

Comparison conditions	■Thrust: 1 kN ■Speed: 200 mm/s ■Stroke: 500 mm ■1 cycle/min. × 12 hrs × 250 days/year ■Includes various drives (induction motor, pneumatic/hydraulic units)

For comparison purposes, disposal/recycling are considered equal and have been omitted from the LCA evaluation.
Reference: Japan Environmental Management Association for Industry MiLCA Ver. 1.20; catalogs from various companies

Simple and Easy to Maintain

Grease is used as the lubricant for the Zip Chain, eliminating the risk of oil leaking from the main unit or piping, as with hydraulic cylinders. In addition, the drive source is connected only by cables, facilitating maintenance by eliminating hydraulic piping.

Comparison of system configuration

Hydraulic/pneumatic cylinders

With hydraulic and pneumatic cylinders, the system conversion efficiency from the power supplied to operation is very low due to the complicated configuration of the system.

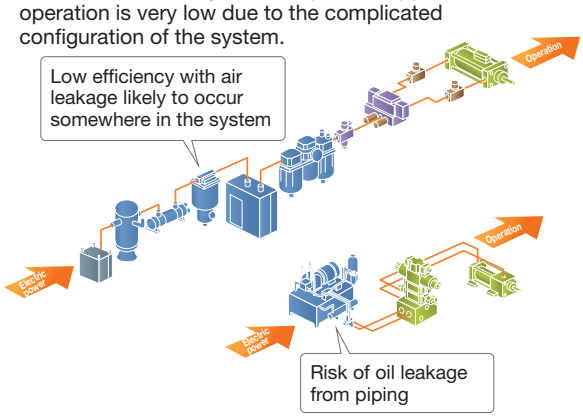

ZIP CHAIN ACTUATOR®

With Zip Chain Actuators, the system conversion efficiency from the power supplied to operation is very high due to the simple system.

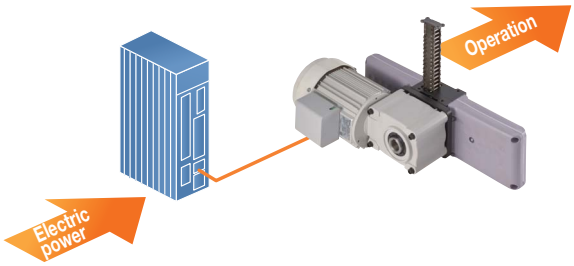

Speed Control, Stopping Accuracy, and Reliable Load Holding

Motorized devices are able to stop at any position using a built-in position detection sensor and brake motor. In addition, using an inverter makes operation at a specific lifting speed possible. Servomotors can also be used as the drive section.
Using a brake motor helps to save energy by no electricity consumption while holing the load, and also reduces the risk of power failure and accidents caused by high-pressure pipe failures.

● Speed control, stopping accuracy

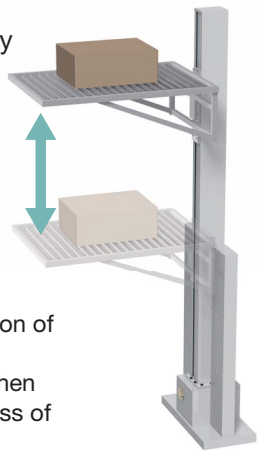

- Synchronized operation of multiple devices
- Stable speed even when descending, regardless of load condition

● Heavy load retention

- Ability to hold load in a stopped position for long periods

Comparing Conventional Linear Motion Mechanisms

Compared with screw jacks and hydraulic/pneumatic mechanisms, Zip Chain Actuators offer incredibly superior performance.

Speed/frequency

Even during high-speed operation, the chains mesh together smoothly, and ZCA® can achieve speeds of 1,000 mm/sec. Even during high-frequency operation, heat generation is minimized, no duty factor restrictions are applied, and continuous operation is possible.

ZIP CHAIN ACTUATOR®

Durability

Zip Chains offer excellent wear resistance with no elongation of chains used in power transmission or transportation, ensuring a long service life and excellent maintainability.

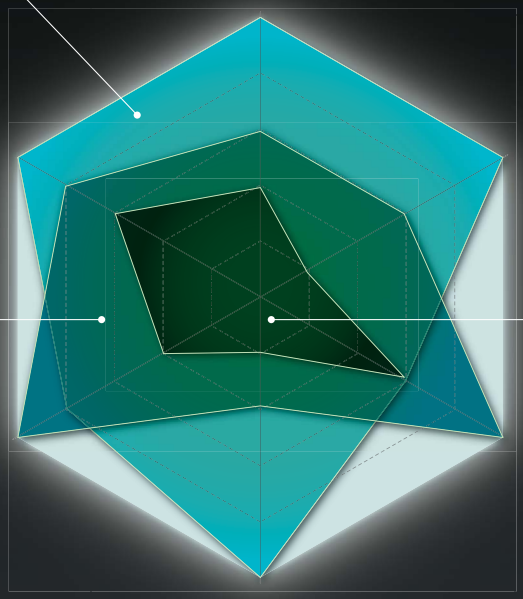

Ease of use

Adjusting the length is as easy as changing the number of links in the chain, and compact storage is possible even with long strokes, making transportation and installation easy.

Screw jacks

Hydraulic/pneumatic mechanisms

Stopping accuracy

A compressive load is constantly applied to the lifter, ensuring highly precise positioning.

Low noise

Chains coupled together smoothly for low-noise operation.

Compactness

Chains stored individually in the chain cases allow impressive space-saving design, where conventional system eventually requires certain space according to the stroke length.

Tsubaki Zip Chain Products

ZIP CHAIN ACTUATOR®

See page 8

ZIP CHAIN ACTUATOR®

ZIP CHAIN ACTUATOR® With No Drive Section

ZIP CHAIN ACTUATOR® With Hypoid Motor

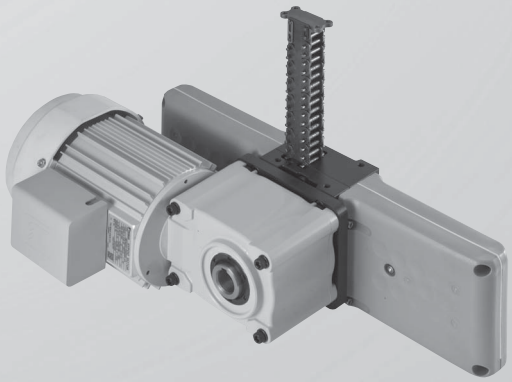

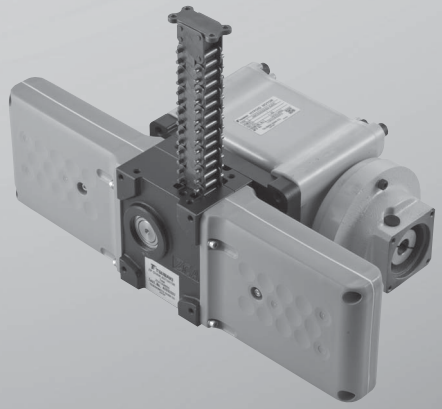

Model

ZCA 35 N 050 E L - J1F

Series | Size | Drive section | Stroke | Mounting | Shaft arrangement | Options

Size

25
35
45

Drive section

N	With No Drive Section

Stroke

Size	25		35			45		
Code	030	050	050	075	100	100	150	200
Allowable stroke mm	300	500	500	750	1,000	1,000	1,500	2,000

Mounting

E			D
Lifting installation	Horizontal installation		Suspending installation (MTO)

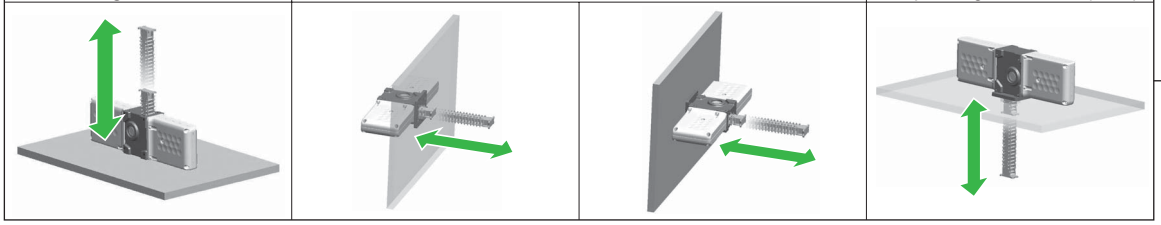

Be sure to always install a linear guide along the direction of travel.

Shaft arrangement

L: Input shaft

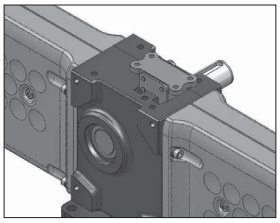

R: Input shaft on opposite side

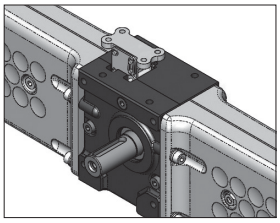

T: Dual input shaft

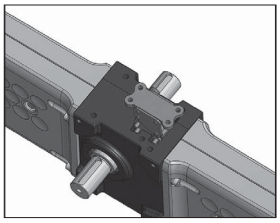

Options

Bellows		Grease plates
J1: For lifting, suspending	J2: For horizontal	F

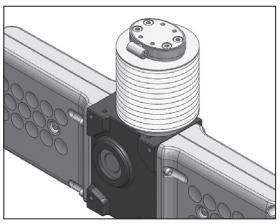

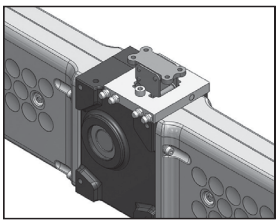

* Option J2 (bellows for horizontal installation) is a made to order product.

Attachable options

Mounting base

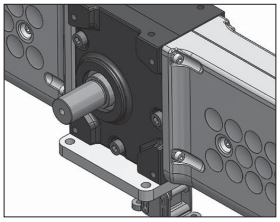

Bottom mounting base

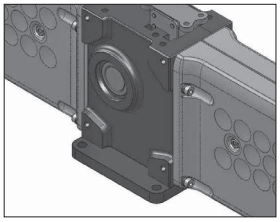

Cap (ZCA35N and ZCA45N only)

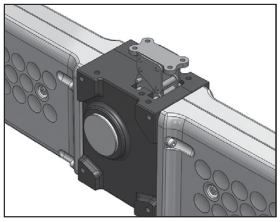

●Bases and caps are available as options. These options must be ordered individually.
See page 41 for more information.

Lineup

○: Standard △: Made to order

Size	Stroke	Mounting method: E			Mounting method: D		
		Shaft arrangement			Shaft arrangement		
	mm	L	R	T	L	R	T
ZCA25N	300	○	○	○	△	△	△
	500	○	○	○	△	△	△
ZCA35N	500	○	○	○	△	△	△
	750	○	○	○	△	△	△
	1,000	○	○	○	△	△	△
ZCA45N	1,000	○	○	○	△	△	△
	1,500	○	○	○	△	△	△
	2,000	○	○	○	△	△	△

Specifications and Environmental Requirements

ZCA main unit		ZCA25N	ZCA35N	ZCA45N
Drive section	Material	Forged steel		
	Coating color	Black, Munsell N2.0 equivalent		
Housing section	Material	Polyacetal		Iron
	Coating color	Purple grey Munsell 0.8P6.3/3.0 equivalent (molded)		Black, Munsell N2.0 equivalent
Chain	Material	Iron		
	Lubricant	Shell Alvania EP Grease 2 [Showa Shell Sekiyu K. K.] * This grease is applied before shipment.		
Environmental requirements	Operating temperature	0 to 60°C		
	Relative humidity	85% or less (no condensation)		
	Ambient atmosphere	Typical rain-free indoor environment with dust levels kept at a general factory level.		
	Installation direction	ZCA can be installed with any direction, be sure to mount a linear guide in the direction of travel. A mounting base is required to suspending installation. See page 42 for more information.		

Characteristics

Without bellows

Model		Allowable stroke*1	Allowable thrust*2		Input shaft				Maximum speed		Zip Chain travel distance per input shaft rotation	Approximate mass		
					Allowable torque		Allowable OHL		Thrust direction	Input shaft rotation		Input shaft Standard/reverse shaft	Input shaft Dual shafts	Suspending installation
		mm	N	{kgf}	N·m	{kgf·m}	N	{kgf}	mm/sec	(r/min)	mm	kg		
ZCA25N	030	300	400	{40.8}	9.41	{0.96}	638	{65.0}	1,000	630	95.3	1.9	2.0	2.5
	050	500	330	{33.6}								2.5	2.6	3.1
ZCA35N	050	500	1,000	{102.0}	34.7	{3.53}	946	{96.4}	1,000	420	142.9	5.1	5.5	6.0
	075	750										6.5	7.0	7.5
	100	1,000	600	{61.2}								7.5	8.0	8.5
ZCA45N	100	1,000	2,000	{204.0}	116.6	{11.9}	2,065	{210.5}	500	125	240	21	21	22
	150	1,500										25	25	27
	200	2,000	1,200	{122.5}								30	30	31

With bellows

Model		Allowable stroke*1	Allowable thrust*2		Input shaft				Maximum speed		Zip Chain travel distance per input shaft rotation	Approximate mass		
					Allowable torque		Allowable OHL		Thrust direction	Input shaft rotation		Input shaft Standard/reverse shaft	Input shaft Dual shafts	Suspending installation
		mm	N	{kgf}	N·m	{kgf·m}	N	{kgf}	mm/sec	(r/min)	mm	kg		
ZCA25N	030	300	400	{40.8}	9.41	{0.96}	638	{65.0}	1,000	630	95.3	2.5	2.6	3.1
	050	500	300	{30.6}								3.1	3.2	3.7
ZCA35N	050	500	1,000	{102.0}	34.7	{3.53}	946	{96.4}	1,000	420	142.9	5.5	6.0	6.5
	075	750										7.0	7.5	8.0
	100	1,000	431	{44.0}								8.0	8.5	9.0
ZCA45N	100	1,000	2,000	{204.0}	116.6	{11.9}	2,065	{210.5}	500	125	240	22	22	23
	150	1,500										27	27	28
	200	2,000	900	{91.8}								32	32	33

*1 Use the unit within the allowable stroke range. Also, be sure to always attach a linear guide in the direction of travel.
*2 Values are obtained when operated at a maximum acceleration of 0.35 G (upper limit) with the end fitting attached.
These values are applicable regardless of the type of installation (vertical, horizontal, suspending).

Characteristics

Without bellows

Model		Allowable stroke*1	Allowable thrust*2		Input shaft				Maximum speed		Zip Chain travel distance per input shaft rotation	Approximate mass		
					Allowable torque		Allowable OHL		Thrust direction	Input shaft rotation		Input shaft Standard/reverse shaft	Input shaft Dual shafts	Suspending installation
		mm	N	{kgf}	N·m	{kgf·m}	N	{kgf}	mm/sec	(r/min)	mm	kg		
ZCA25N	030	300	400	{40.8}	9.41	{0.96}	638	{65.0}	1,000	630	95.3	1.9	2.0	2.5
	050	500	330	{33.6}								2.5	2.6	3.1

With bellows

Model		Allowable stroke*1	Allowable thrust*2		Input shaft				Maximum speed		Zip Chain travel distance per input shaft rotation	Approximate mass		
					Allowable torque		Allowable OHL		Thrust direction	Input shaft rotation		Input shaft Standard/reverse shaft	Input shaft Dual shafts	Suspending installation
		mm	N	{kgf}	N·m	{kgf·m}	N	{kgf}	mm/sec	(r/min)	mm	kg		
ZCA25N	030	300	400	{40.8}	9.41	{0.96}	638	{65.0}	1,000	630	95.3	2.5	2.6	3.1
	050	500	300	{30.6}								3.1	3.2	3.7

*1 Use the unit within the allowable stroke range. Also, be sure to always attach a linear guide in the direction of travel.
*2 Values are obtained when operated at a maximum acceleration of 0.35 G (upper limit) with the end fitting attached.
These values are applicable regardless of the type of installation (vertical, horizontal, suspending).

Dimensions

ZCA25N□□□EL (Standard input shaft)

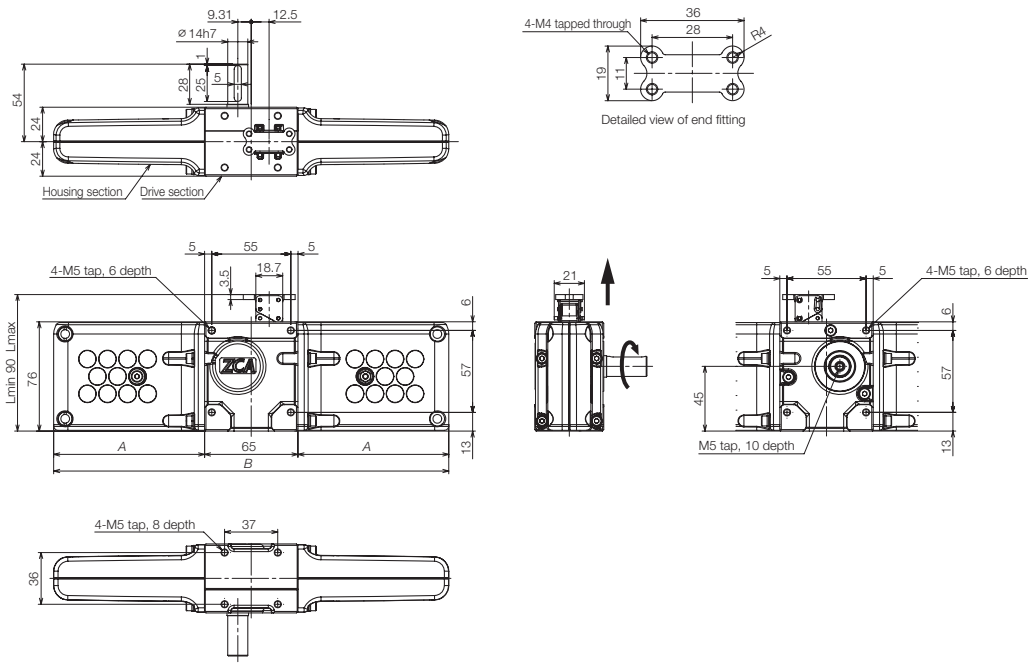

Above is ZCA25N030EL dimension.
See Table 1 for ZCA25N050EL housing dimensions A, B, and L.

Table 1: ZCA25N□□□EL·ER·ET

Stroke code	*A* mm	*B* mm	*Lmax* mm
030	105	275	390
050	149	363	590

Table 2: ZCA25N□□□D

Stroke code	*A* mm	*B* mm	*Lmax* mm
030	105	275	405
050	149	363	605

Input shaft key

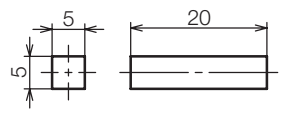

Input shaft key
(Shipped with instruction manual)
JIS B 1301- 1996

ZCA25N□□□ER (Input shaft on opposite side)

The mounting taps on the drive section base are the same as those on the basic model.

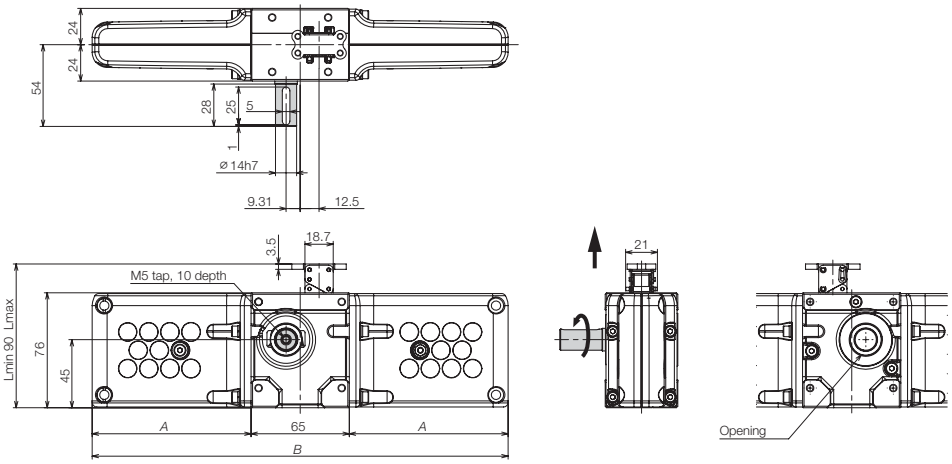

Above is ZCA25N030ER dimension.
See Table 1 for ZCA25N050ER housing dimensions A, B, and L.

ZCA25N□□□ET (Dual input shaft)

The mounting taps on the drive section base are the same as those on the basic model.

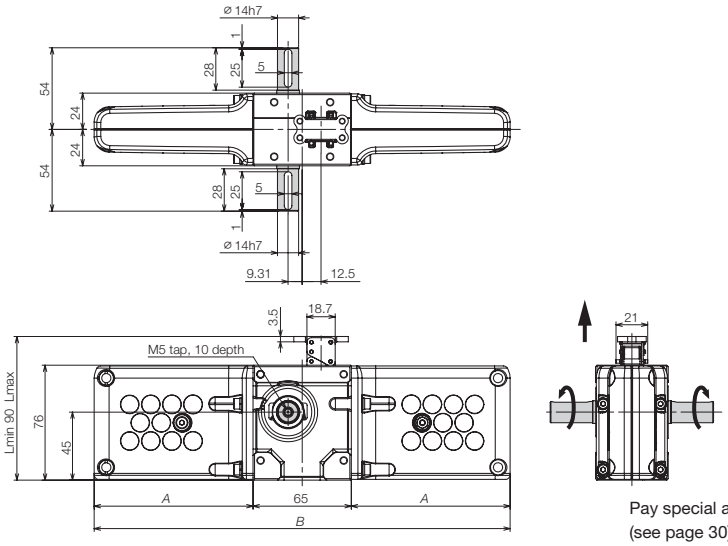

Above is ZCA25N030ET dimension.

Pay special attention to the input torque when operating multiple ZCAs are aligned (see page 30). See Table 1 for ZCA25N050ET housing dimensions A, B, and L.

ZCA25N□□□D (Suspending installation)

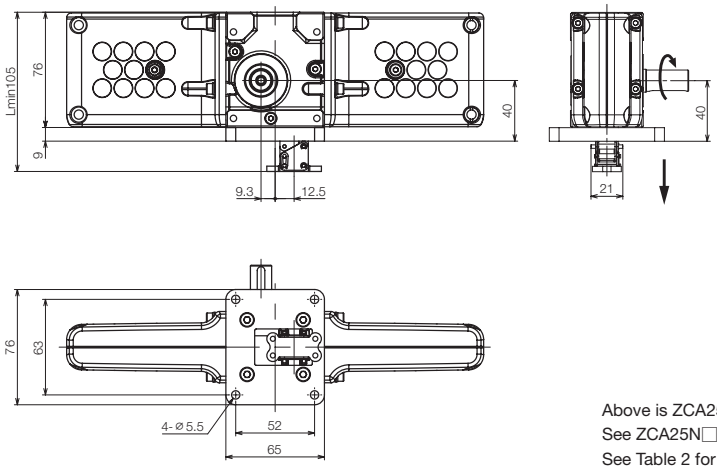

Above is ZCA25N030DL dimension.
See ZCA25N□□□ER/ET dimensions on input shaft for shaft arrangement R and T.
See Table 2 for ZCA25N050DL housing dimensions A, B, and L.

Characteristics

Without bellows

Model		Allowable stroke*1	Allowable thrust*2		Input shaft				Maximum speed		Zip Chain travel distance per input shaft rotation	Approximate mass		
					Allowable torque		Allowable OHL		Thrust direction	Input shaft rotation		Input shaft Standard/reverse shaft	Input shaft Dual shafts	Suspending installation
		mm	N	{kgf}	N·m	{kgf·m}	N	{kgf}	mm/sec	(r/min)	mm	kg		
ZCA35N	050	500	1,000	{102.0}	34.7	{3.53}	946	{96.4}	1,000	420	142.9	5.1	5.5	6.0
	075	750										6.5	7.0	7.5
	100	1,000	600	{61.2}								7.5	8.0	8.5

With bellows

Model		Allowable stroke*1	Allowable thrust*2		Input shaft				Maximum speed		Zip Chain travel distance per input shaft rotation	Approximate mass		
					Allowable torque		Allowable OHL		Thrust direction	Input shaft rotation		Input shaft Standard/reverse shaft	Input shaft Dual shafts	Suspending installation
		mm	N	{kgf}	N·m	{kgf·m}	N	{kgf}	mm/sec	(r/min)	mm	kg		
ZCA35N	050	500	1,000	{102.0}	34.7	{3.53}	946	{96.4}	1,000	420	142.9	5.5	6.0	6.5
	075	750										7.0	7.5	8.0
	100	1,000	431	{44.0}								8.0	8.5	9.0

*1 Use the unit within the allowable stroke range. Also, be sure to always attach a linear guide in the direction of travel.
*2 Values are obtained when operated at a maximum acceleration of 0.35 G (upper limit) with the end fitting attached.
These values are applicable regardless of the type of installation (vertical, horizontal, suspending).

Dimensions

ZCA35N□□□EL (Standard input shaft)

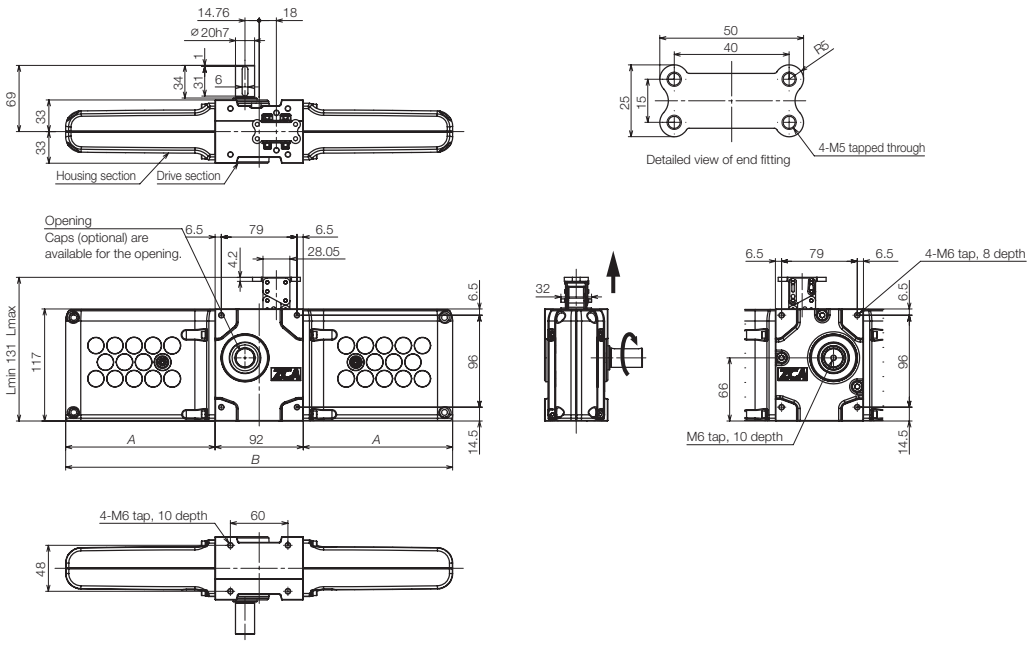

Above is ZCA35N050EL dimension.
See Table 1 for ZCA35N075/100EL housing dimensions A, B, and L.

Table 1: ZCA35N□□□EL·ER·ET

Stroke code	*A* mm	*B* mm	*Lmax* mm
050	156	404	631
075	218.5	529	881
100	281	654	1,131

Table 2: ZCA35N□□□D

Stroke code	*A* mm	*B* mm	*Lmax* mm
050	156	404	649
075	218.5	529	899
100	281	654	1,149

Input shaft key

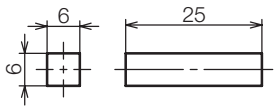

Input shaft key
(Shipped with instruction manual)
JIS B 1301- 1996

ZCA35N□□□ER (Input shaft on opposite side)

The mounting taps on the drive section base are the same as those on the basic model.

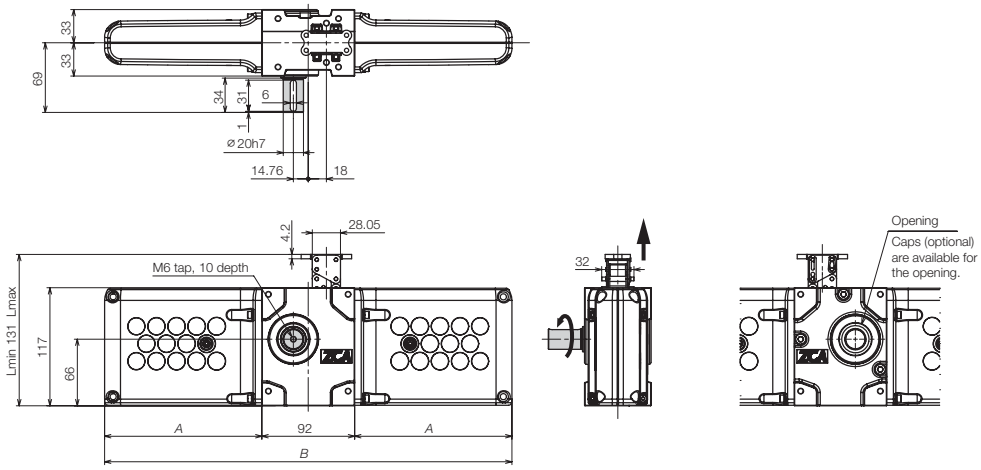

Above is ZCA35N050ER dimension.
See Table 1 for ZCA35N075/100ER housing dimensions A, B, and L.

ZCA35N□□□ET (Dual input shaft)

The mounting taps on the drive section base are the same as those on the basic model.

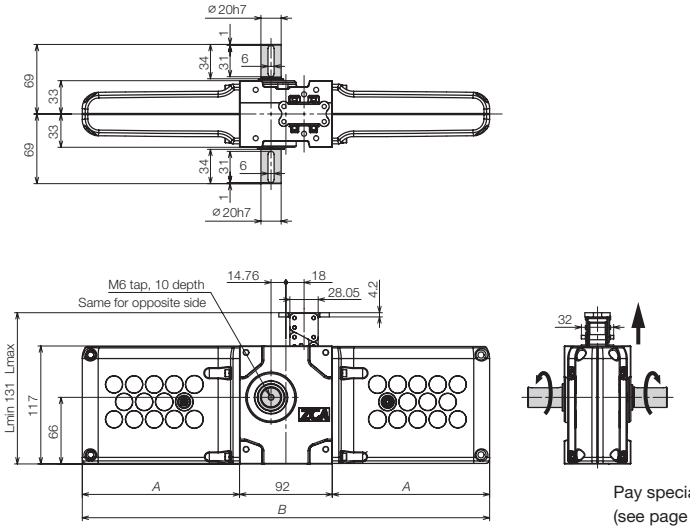

Above is ZCA35N050ET dimension.

Pay special attention to the input torque when operating multiple ZCAs are aligned (see page 30). See Table 1 for ZCA35N075/100ET housing dimensions A, B, and L.

ZCA35N□□□D (Suspending installation)

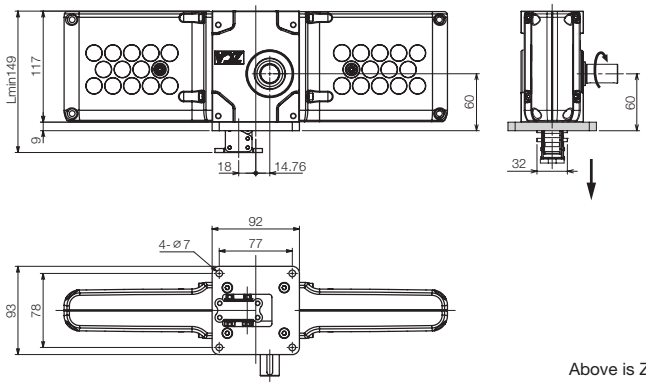

Above is ZCA35N050DL dimension.
See ZCA35N□□□ER/ET dimensions on input shaft for shaft arrangement R and T.
See Table 2 for ZCA35N075/100DL housing dimensions A, B, and L.

Characteristics

Without bellows

Model		Allowable stroke*1	Allowable thrust*2		Input shaft				Maximum speed		Zip Chain travel distance per input shaft rotation	Approximate mass		
					Allowable torque		Allowable OHL		Thrust direction	Input shaft rotation		Input shaft Standard/reverse shaft	Input shaft Dual shafts	Suspending installation
		mm	N	{kgf}	N·m	{kgf·m}	N	{kgf}	mm/sec	(r/min)	mm	kg		
ZCA45N	100	1,000	2,000	{204.0}	116.6	{11.9}	2,065	{210.5}	500	125	240	21	21	22
	150	1,500										25	25	27
	200	2,000	1,200	{122.5}								30	30	31

With bellows

Model		Allowable stroke*1	Allowable thrust*2		Input shaft				Maximum speed		Zip Chain travel distance per input shaft rotation	Approximate mass		
					Allowable torque		Allowable OHL		Thrust direction	Input shaft rotation		Input shaft Standard/reverse shaft	Input shaft Dual shafts	Suspending installation
		mm	N	{kgf}	N·m	{kgf·m}	N	{kgf}	mm/sec	(r/min)	mm	kg		
ZCA45N	100	1,000	2,000	{204.0}	116.6	{11.9}	2,065	{210.5}	500	125	240	22	22	23
	150	1,500										27	27	28
	200	2,000	900	{91.8}								32	32	33

*1 Use the unit within the allowable stroke range. Also, be sure to always attach a linear guide in the direction of travel.
*2 Values are obtained when operated at a maximum acceleration of 0.35 G (upper limit) with the end fitting attached.
These values are applicable regardless of the type of installation (vertical, horizontal, suspending).

Dimensions

ZCA45N□□□EL (Standard shaft)

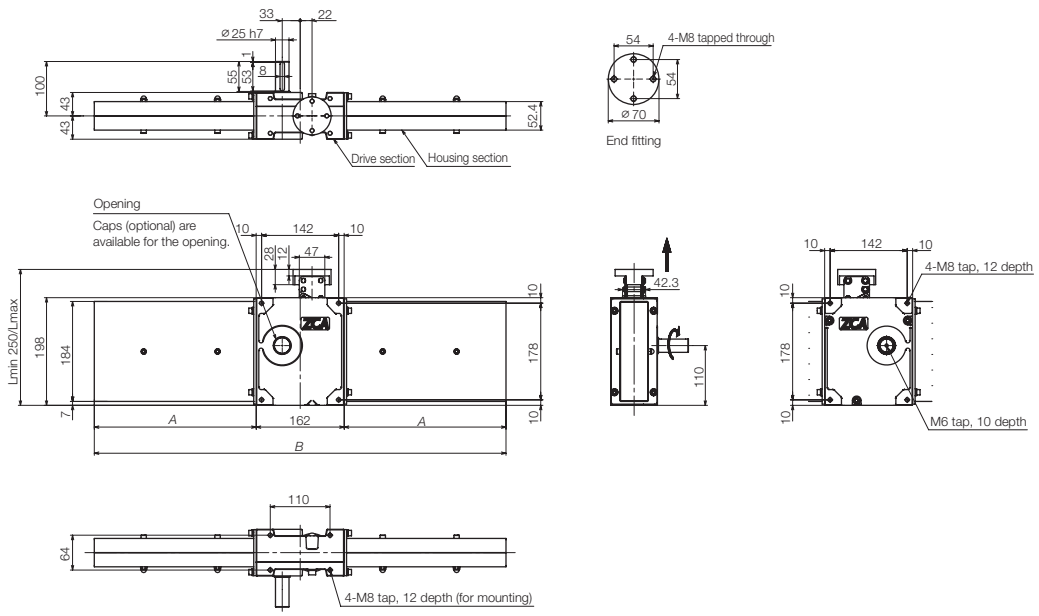

See Table 1 for dimensions A, B, and L.

Table 1: ZCA45N□□□EL·ER·ET

Stroke code	*A* mm	*B* mm	*Lmax* mm
100	298	758	1,250
150	423	1,008	1,750
200	548	1,258	2,250

Table 2: ZCA45N□□□D

Stroke code	*A* mm	*B* mm	*Lmax* mm
100	298	758	1,274
150	423	1,008	1,774
200	548	1,258	2,274

Input shaft key

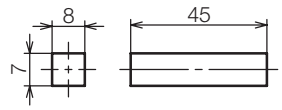

Input shaft key
(Shipped with instruction manual)
JIS B 1301- 1996

ZCA45N□□□ER (Input shaft on opposite side)

The mounting taps on the drive section base are the same as those on the basic model.

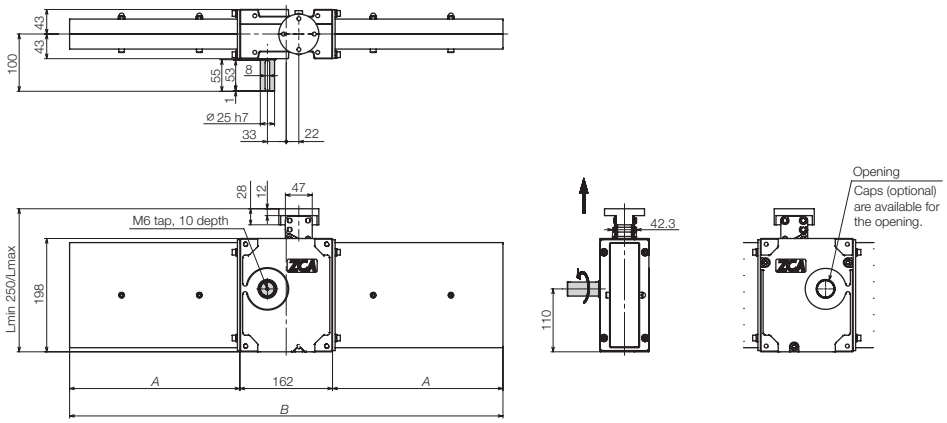

See Table 1 for dimensions A, B, and L.

ZCA45N□□□ET (Dual input shaft)

The mounting taps on the drive section base are the same as those on the basic model.

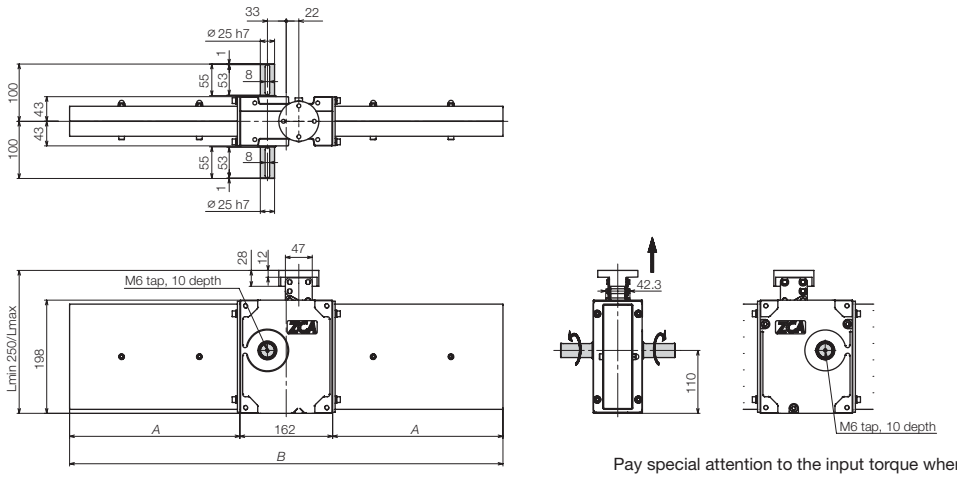

Pay special attention to the input torque when operating multiple ZCAs are aligned (see page 30). See Table 1 for dimensions A, B, and L.

ZCA45N□□□D (Suspending installation)

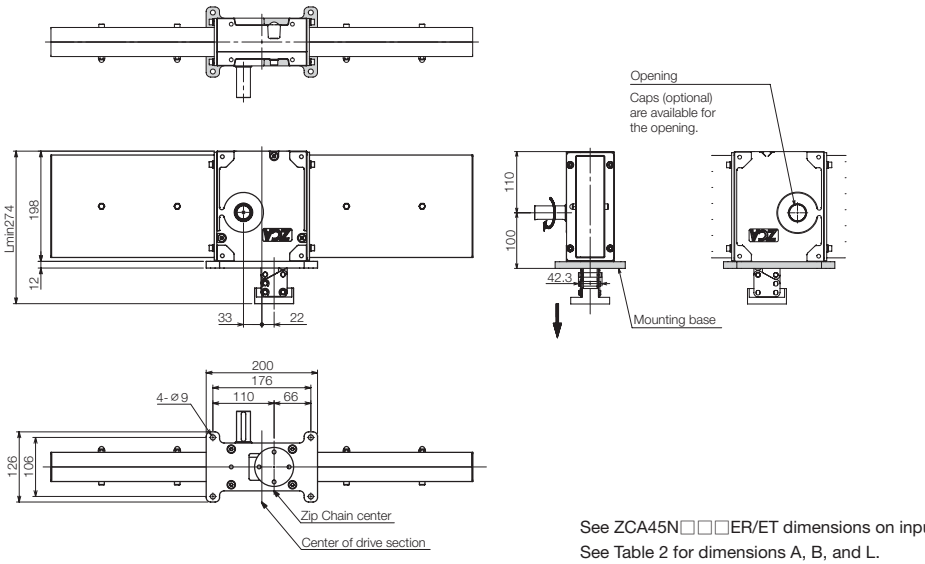

See ZCA45N□□□ER/ET dimensions on input shaft for shaft arrangement R and T.
See Table 2 for dimensions A, B, and L.

Model

ZCA 35 M 075 E T 040 H 15 - J1F

ZCA	35	M	075	E	T	040	H	15	-	J1F
Series	Size	Drive section	Stroke	Mounting	Shaft arrangement	Motor size	Hypoid	Reduction ratio		Options

See page 18

See page 18

Size

25
35
45

Drive section

M	With Hypoid Motor

Stroke

Size	25		35			45		
Code	030	050	050	075	100	100	150	200
Allowable stroke mm	300	500	500	750	1,000	1,000	1,500	2,000

Mounting

E			D
Lifting installation	Horizontal installation		Suspending installation (MTO)

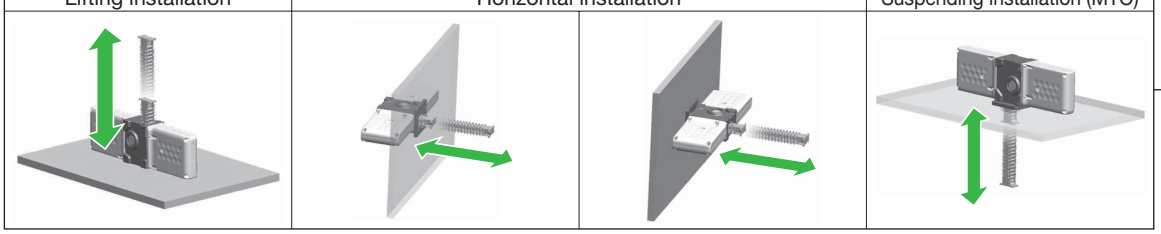

Be sure to always install a linear guide along the direction of travel.

Shaft arrangement

L: Input shaft

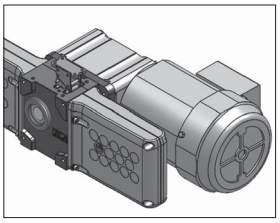

T: Dual input shaft

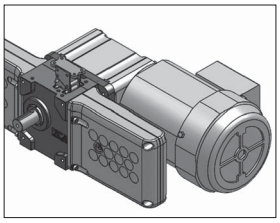

Options

Bellows		Grease plates
J1: For lifting, suspending	J2: For horizontal (MTO)	F

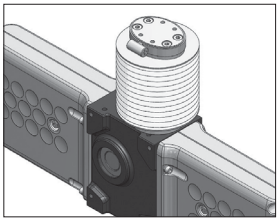

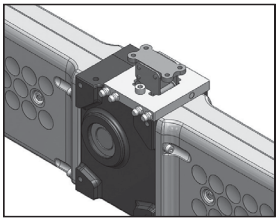

* Option J2 (bellows for horizontal installation) is made to order.

Attachable options

Mounting base

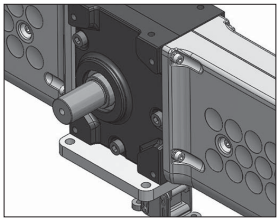

Bottom mounting base

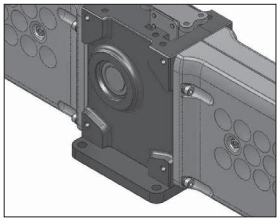

Cap (ZCA35M and ZCA45M only)

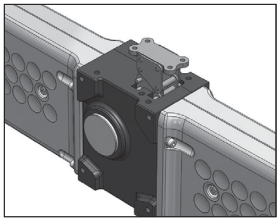

●Bases and caps are available as options. See page 41 for more information.

Lineup (with motor size and reduction ratio)

○: Standard △: Made to order

Size	Motor size	Reduction ratio	Stroke	Mounting method: E Shaft arrangement		Mounting method: D Shaft arrangement	
			mm	L	T	L	T
ZCA25M	006 (60 W)	40 50 60	300	○	○	△	△
			500	○	○	△	△
	009 (90 W)	10 15 20 25 30	300	○	○	△	△
			500	○	○	△	△
ZCA35M	020 (0.2 kW)	40 50 60	500	○	○	△	△
			750	○	○	△	△
			1,000	○	○	△	△
	040 (0.4 kW)	10 12.5 15 20 25 30	500	○	○	△	△
			750	○	○	△	△
			1,000	○	○	△	△
ZCA45M	040 (0.4 kW)	60 80 100	1,000	○	○	△	△
			1,500	○	○	△	△
			2,000	○	○	△	△
	075 (0.75 kW)	10 12.5 15 20 25 30 40 50	1,000	○	○	△	△
			1,500	○	○	△	△
			2,000	○	○	△	△

Contact Tsubaki representative for motor size combinations not listed above.

Specifications and Environmental Requirements

ZCA main unit		ZCA25M	ZCA35M	ZCA45M
Drive section	Material	Forged steel		
	Coating color	Black, Munsell N2.0 equivalent		
Housing section	Material	Polyacetal		Iron
	Coating color	Purple grey Munsell 0.8P6.3/3.0 equivalent (molded)		Black, Munsell N2.0 equivalent
Chain	Material	Iron		
	Lubricant	Shell Alvania EP Grease 2 [Showa Shell Sekiyu K. K.] * This grease is applied before shipment.		
Environmental requirements	Operating temperature	0 to 40°C		
	Relative humidity	85% or less (no condensation)		
	Ambient atmosphere	Typical rain-free indoor environment with dust levels kept at a general factory level.		
	Installation direction	The unit can be hung or mounted vertically or horizontally. However, regardless of the installation direction, be sure to mount a linear guide in the direction of travel. A mounting base is required to hang the unit. See page 42 for more information.		

Hypoid motor		ZCA25M	ZCA35M ZCA45M
Motor	Output	Three-phase: 60, 90 W	Three-phase: (1) 0.2, 0.4 kW: With brake (2) 0.75 kW: With brake
	Power source*	200/200/220 V 50/60/60 Hz	0.2 0.4 0.75 kW 200/200/220 V 50/60/60 Hz
	Number of poles	4	
	Protection	Totally enclosed (IP30)	0.2/0.4/0.75 kW(IP20)
	Cooling	Air-cooled	0.2/0.4/0.75 kW(IC411)
	Rating	S1 (continuous)	
	Heat-resistance class	120(E)	0.2/0.4 kW-120(E) 0.75 kW-155(F)
	Type of brake	Power-off type, DC electromagnetic brake	
Reducer	Lubrication system	Grease lubrication	
Ambient conditions	Installation location	Indoors, free of dust and water	
	Altitude	1,000 m or less above sea level	
	Atmosphere	Area must be free of corrosive and explosive gases, and steam.	
	Coating color	Munsell N7.5 / Light gray	Munsell 2.5G6/3

* 400 V class also available. Contact a Tsubaki representative for more information.

Characteristics

Model			Hypoid motor		Rated thrust N {kgf}		Speed mm/sec		Allowable start-up frequency Times/min		Approximate mass kg		
Size	Drive section	Stroke mm	(Motor size)	Reduction ratio			50 Hz	60 Hz	50 Hz	60 Hz	Single input shaft	Dual input shafts	Suspending installation
ZCA25	M	300	006 (60 W)	40	*400	{ *40.8 }	60	73	10	10	10	10	11
				50	*400	{ *40.8 }	48	58	9	10	10	10	11
				60	*400	{ *40.8 }	40	48	8	9	10	10	11
			009 (90 W)	10	166	{ 17.0 }	243	292	10	10	10.5	10.5	11.5
				15	274	{ 28.0 }	162	195	10	10	10.5	10.5	11.5
				20	382	{ 39.0 }	122	145	10	10	10.5	10.5	11.5
				25	*400	{ *40.8 }	97	117	10	10	10.5	10.5	11.5
				30	*400	{ *40.8 }	82	97	10	10	10.5	10.5	11.5
		500	006 (60 W)	40	*330	{ *33.6 }	60	73	10	10	10.5	10.5	11.5
				50	*330	{ *33.6 }	48	58	9	10	10.5	10.5	11.5
				60	*330	{ *33.6 }	40	48	8	9	10.5	10.5	11.5
			009 (90 W)	10	166	{ 17.0 }	243	292	10	10	11	11	12
				15	274	{ 28.0 }	162	195	10	10	11	11	12
				20	*330	{ *33.6 }	122	145	10	10	11	11	12
				25	*330	{ *33.6 }	97	117	10	10	11	11	12
				30	*330	{ *33.6 }	82	97	10	10	11	11	12
ZCA35	M	500	020 (0.2 kW)	40	*1,000	{ *102.0 }	91	110	10	10	14	14	15.5
				50	*1,000	{ *102.0 }	73	88	8	10	14	14	15.5
				60	*1,000	{ *102.0 }	61	73	7	8	14	14	15.5
			040 (0.4 kW)	10	617	{ 63.0 }	365	438	3	5	18	18	19.5
				12.5	794	{ 81.0 }	292	351	8	10	18	18	19.5
				15	941	{ 96.0 }	243	292	10	10	18	18	19.5
				20	*1,000	{ *102.0 }	183	219	10	10	18	18	19.5
				25	*1,000	{ *102.0 }	146	175	10	10	18	18	19.5
				30	*1,000	{ *102.0 }	122	146	10	10	18	18	19.5
		750	020 (0.2 kW)	40	*1,000	{ *102.0 }	91	110	10	10	15	15.5	16.5
				50	*1,000	{ *102.0 }	73	88	8	10	15	15.5	16.5
				60	*1,000	{ *102.0 }	61	73	7	8	15	15.5	16.5
			040 (0.4 kW)	10	617	{ 63.0 }	365	438	3	5	19	19.5	21
				12.5	794	{ 81.0 }	292	351	8	10	19	19.5	21
				15	941	{ 96.0 }	243	292	10	10	19	19.5	21
				20	*1,000	{ *102.0 }	183	219	10	10	19	19.5	21
				25	*1,000	{ *102.0 }	146	175	10	10	19	19.5	21
				30	*1,000	{ *102.0 }	122	146	10	10	19	19.5	21
		1,000	020 (0.2 kW)	40	*600	{ *61.2 }	91	110	10	10	16	16	17.5
				50	*600	{ *61.2 }	73	88	8	10	16	16	17.5
				60	*600	{ *61.2 }	61	73	7	8	16	16	17.5
			040 (0.4 kW)	10	*600	{ *61.2 }	365	438	3	5	20	20	21.5
				12.5	*600	{ *61.2 }	292	351	8	10	20	20	21.5
				15	*600	{ *61.2 }	243	292	10	10	20	20	21.5
				20	*600	{ *61.2 }	183	219	10	10	20	20	21.5
				25	*600	{ *61.2 }	146	175	10	10	20	20	21.5
				30	*600	{ *61.2 }	122	146	10	10	20	20	21.5

Rated thrust values are for operation at 60 Hz.
* Models marked with have torque limits.

Model			Hypoid motor		Rated thrust N {kgf}		Speed mm/sec		Allowable start-up frequency Times/min		Approximate mass kg		
Size	Drive section	Stroke mm	(Motor size)	Reduction ratio			50 Hz	60 Hz	50 Hz	60 Hz	Single input shaft	Dual input shafts	Suspending installation
ZCA45	M	1,000	040 (0.4 kW)	60	*2,000	{ *204 }	102	122	6	7	35.5	36	37.5
				80	*2,000	{ *204 }	76	91	4.5	5.5	35.5	36	37.5
				100	*2,000	{ *204 }	61	73	4	4.5	35.5	36	37.5
			075 (0.75 kW)	10	617	{ 63 }	500	500	0.5	1	47.5	47.5	49
				12.5	813	{ 83 }	490	500	1	2	47.5	47.5	49
				15	980	{ 100 }	408	490	2	4.5	47.5	47.5	49
				20	*2,000	{ *204 }	306	367	5	9	47.5	47.5	49
				25	*2,000	{ *204 }	245	294	10	10	47.5	47.5	49
				30	*2,000	{ *204 }	204	245	10	10	47.5	47.5	49
				40	*2,000	{ *204 }	153	183	9	10	47.5	47.5	49
				50	*2,000	{ *204 }	122	147	7	8	47.5	47.5	49
		1,500	040 (0.4 kW)	60	*2,000	{ *204 }	102	122	6	7	40	40.5	42
				80	*2,000	{ *204 }	76	91	4.5	5.5	40	40.5	42
				100	*2,000	{ *204 }	61	73	4	4.5	40	40.5	42
			075 (0.75 kW)	10	617	{ 63 }	500	500	0.5	1	51.5	52	53.5
				12.5	813	{ 83 }	490	500	1	2	51.5	52	53.5
				15	980	{ 100 }	408	490	2	4.5	51.5	52	53.5
				20	*1,392	{ *142 }	306	367	5	9	51.5	52	53.5
				25	*1,765	{ *180 }	245	294	10	10	51.5	52	53.5
				30	*2,000	{ *204 }	204	245	10	10	51.5	52	53.5
				40	*2,000	{ *204 }	153	183	9	10	51.5	52	53.5
				50	*2,000	{ *204 }	122	147	7	8	51.5	52	53.5
		2,000	040 (0.4 kW)	60	*1,200	{ *122 }	102	122	6	7	44.5	44.5	46
				80	*1,200	{ *122 }	76	91	4.5	5.5	44.5	44.5	46
				100	*1,200	{ *122 }	61	73	4	4.5	44.5	44.5	46
			075 (0.75 kW)	10	617	{ 63 }	500	500	0.5	1	56	56.5	58
				12.5	813	{ 83 }	490	500	1	2	56	56.5	58
				15	980	{ 100 }	408	490	2	4.5	56	56.5	58
				20	*1,200	{ *122 }	306	367	5	9	56	56.5	58
				25	*1,200	{ *122 }	245	294	10	10	56	56.5	58
				30	*1,200	{ *122 }	204	245	10	10	56	56.5	58
				40	*1,200	{ *122 }	153	183	9	10	56	56.5	58
				50	*1,200	{ *122 }	122	147	7	8	56	56.5	58

Rated thrust values are for operation at 60 Hz.
* Models marked with have torque limits.

Characteristics

Model			Hypoid motor		Rated thrust N {kgf}		Speed mm/sec		Allowable start-up frequency Times/min		Approximate mass kg		
Size	Drive section	Stroke mm	(Motor size)	Reduction ratio			50 Hz	60 Hz	50 Hz	60 Hz	Single input shaft	Dual input shafts	Suspending installation
ZCA25	M	300	006 (60 W)	40	*400	{ *40.8 }	60	73	10	10	10	10	11
				50	*400	{ *40.8 }	48	58	9	10	10	10	11
				60	*400	{ *40.8 }	40	48	8	9	10	10	11
			009 (90 W)	10	166	{ 17.0 }	243	292	10	10	10.5	10.5	11.5
				15	274	{ 28.0 }	162	195	10	10	10.5	10.5	11.5
				20	382	{ 39.0 }	122	145	10	10	10.5	10.5	11.5
				25	*400	{ *40.8 }	97	117	10	10	10.5	10.5	11.5
				30	*400	{ *40.8 }	82	97	10	10	10.5	10.5	11.5
		500	006 (60 W)	40	*330	{ *33.6 }	60	73	10	10	10.5	10.5	11.5
				50	*330	{ *33.6 }	48	58	9	10	10.5	10.5	11.5
				60	*330	{ *33.6 }	40	48	8	9	10.5	10.5	11.5
			009 (90 W)	10	166	{ 17.0 }	243	292	10	10	11	11	12
				15	274	{ 28.0 }	162	195	10	10	11	11	12
				20	*330	{ *33.6 }	122	145	10	10	11	11	12
				25	*330	{ *33.6 }	97	117	10	10	11	11	12
				30	*330	{ *33.6 }	82	97	10	10	11	11	12

Rated thrust values are for operation at 60 Hz.
* Models marked with have torque limits.

Dimensions

ZCA25M□□□EL (Standard input shaft)

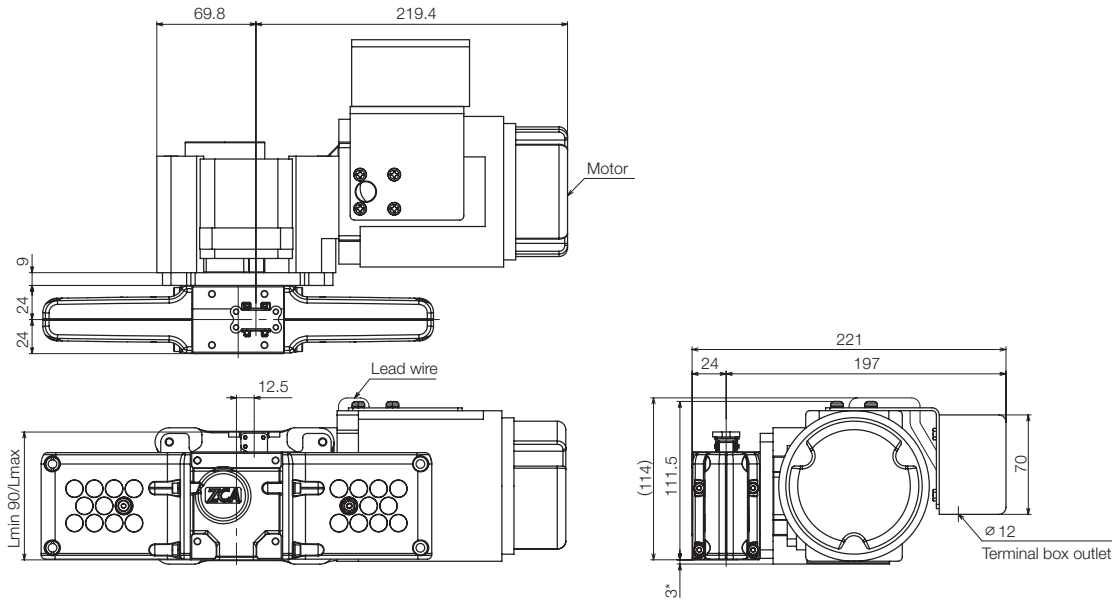

*1 The mounting taps on the drive section base are the same with ZCA25N with no drive (page 11).
*2 Be aware that the motor unit is larger than the drive section base.
*3 The Lmin and Lmax dimensions are the same as with the ZCA25N (without drive section).

ZCA25M□□□ET (Dual input shaft)

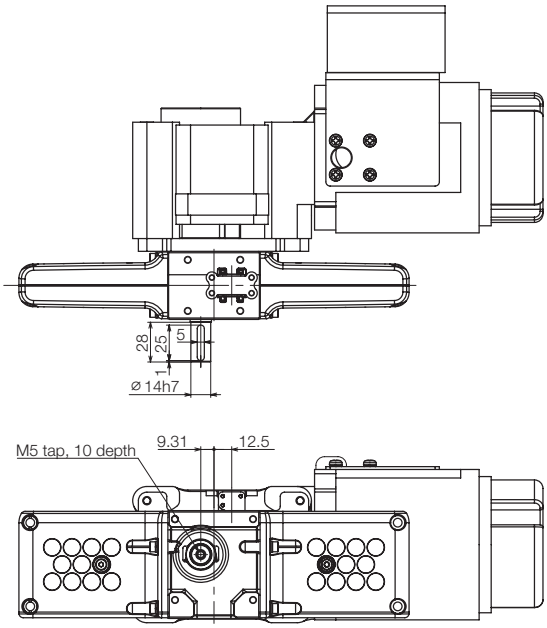

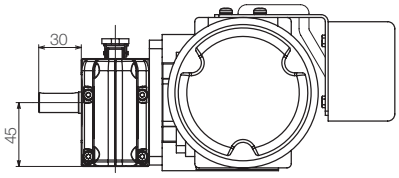

*1 The mounting taps on the drive section base are the same with ZCA25N with no drive (page 11).
*2 Be aware that the motor unit is larger than the drive section base.
*3 The Lmin and Lmax dimensions are the same as with the ZCA25N (without drive section).
*4 See ZCA25M□□□EL with standard input shaft dimension for the motor dimensions.

ZCA25M□□□D (Suspending installation)

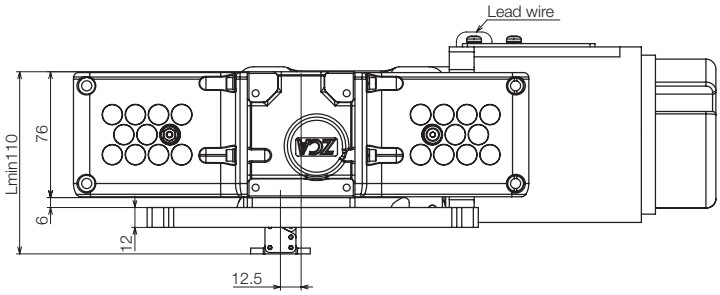

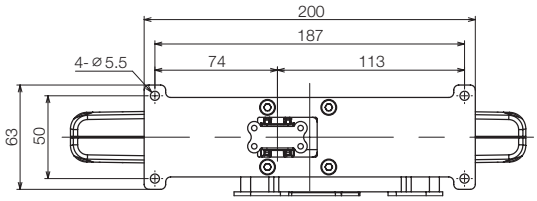

*1 The mounting taps on the drive section base are the same with ZCA25N with no drive (page 11).
*2 The Lmin and Lmax dimensions are the same as with the ZCA25N (without drive section).
*3 See ZCA25M□□□EL with standard input shaft dimension for the motor dimensions.

Characteristics

Model			Hypoid motor		Rated thrust N {kgf}		Speed mm/sec		Allowable start-up frequency Times/min		Approximate mass kg		
Size	Drive section	Stroke mm	(Motor size)	Reduction ratio			50 Hz	60 Hz	50 Hz	60 Hz	Single input shaft	Dual input shafts	Suspending installation
ZCA35	M	500	020 (0.2 kW)	40	*1,000	{ *102.0 }	91	110	10	10	14	14	15.5
				50	*1,000	{ *102.0 }	73	88	8	10	14	14	15.5
				60	*1,000	{ *102.0 }	61	73	7	8	14	14	15.5
			040 (0.4 kW)	10	617	{ 63.0 }	365	438	3	5	18	18	19.5
				12.5	794	{ 81.0 }	292	351	8	10	18	18	19.5
				15	941	{ 96.0 }	243	292	10	10	18	18	19.5
				20	*1,000	{ *102.0 }	183	219	10	10	18	18	19.5
				25	*1,000	{ *102.0 }	146	175	10	10	18	18	19.5
				30	*1,000	{ *102.0 }	122	146	10	10	18	18	19.5
		750	020 (0.2 kW)	40	*1,000	{ *102.0 }	91	110	10	10	15	15.5	16.5
				50	*1,000	{ *102.0 }	73	88	8	10	15	15.5	16.5
				60	*1,000	{ *102.0 }	61	73	7	8	15	15.5	16.5
			040 (0.4 kW)	10	617	{ 63.0 }	365	438	3	5	19	19.5	21
				12.5	794	{ 81.0 }	292	351	8	10	19	19.5	21
				15	941	{ 96.0 }	243	292	10	10	19	19.5	21
				20	*1,000	{ *102.0 }	183	219	10	10	19	19.5	21
				25	*1,000	{ *102.0 }	146	175	10	10	19	19.5	21
				30	*1,000	{ *102.0 }	122	146	10	10	19	19.5	21
		1,000	020 (0.2 kW)	40	*600	{ *61.2 }	91	110	10	10	16	16	17.5
				50	*600	{ *61.2 }	73	88	8	10	16	16	17.5
				60	*600	{ *61.2 }	61	73	7	8	16	16	17.5
			040 (0.4 kW)	10	*600	{ *61.2 }	365	438	3	5	20	20	21.5
				12.5	*600	{ *61.2 }	292	351	8	10	20	20	21.5
				15	*600	{ *61.2 }	243	292	10	10	20	20	21.5
				20	*600	{ *61.2 }	183	219	10	10	20	20	21.5
				25	*600	{ *61.2 }	146	175	10	10	20	20	21.5
				30	*600	{ *61.2 }	122	146	10	10	20	20	21.5

Rated thrust values are for operation at 60 Hz.
* Models marked with have torque limits.

Dimensions

ZCA35M□□□EL (Standard input shaft)

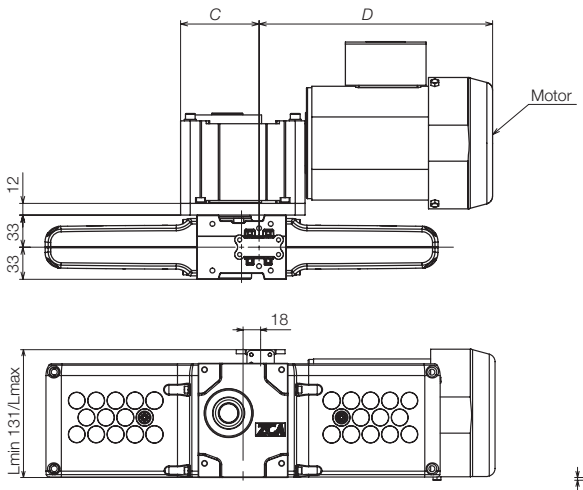

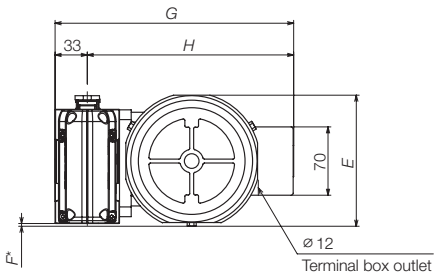

*1 The mounting taps on the drive section base are the same with ZCA35N with no drive (page 13).
*2 Be aware that the motor unit is larger than the drive section base.
*3 The Lmin and Lmax dimensions are the same with ZCA35N with no drive.
*4 See the following table for dimensions C, D, E, F, G, and H.

Motor size kW	C mm	D mm	E mm	F mm	G mm	H mm
0.2	80.8	240.2	134.5	3.5	244.5	211.5
0.4	91.8	274.7	134.5	11.5	248.5	215.5

ZCA35M□□□ET (Dual input shaft)

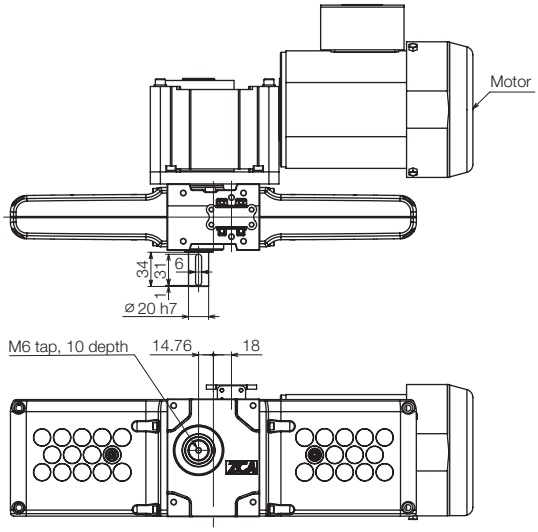

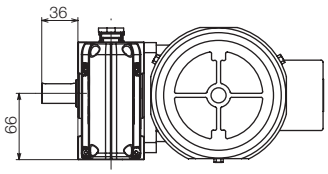

*1 The mounting taps on the drive section base are the same with ZCA35N with no drive (page 13).
*2 The Lmin and Lmax dimensions are the same with ZCA35N.
*3 See ZCA35M□□□EL with standard input shaft dimension for the motor dimensions.

ZCA35M□□□D (Suspending installation)

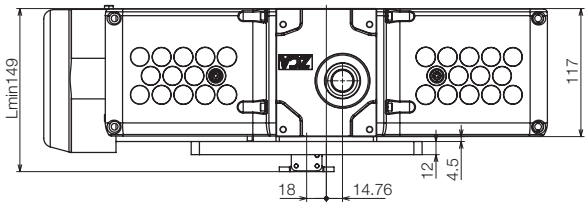

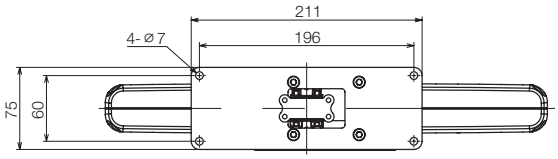

*1 The mounting taps on the drive section base are the same with ZCA35N with no drive (page 13).
*2 The Lmin and Lmax dimensions are the same with ZCA35N.
*3 See ZCA35M□□□EL with standard input shaft dimension for the motor dimensions.

Characteristics

Model			Hypoid motor		Rated thrust N {kgf}		Speed mm/sec		Allowable start-up frequency Times/min		Approximate mass kg		
Size	Drive section	Stroke mm	(Motor size)	Reduction ratio			50 Hz	60 Hz	50 Hz	60 Hz	Single input shaft	Dual input shafts	Suspending installation
ZCA45	M	1,000	040 (0.4 kW)	60	*2,000	{ *204 }	102	122	6	7	35.5	36	37.5
				80	*2,000	{ *204 }	76	91	4.5	5.5	35.5	36	37.5
				100	*2,000	{ *204 }	61	73	4	4.5	35.5	36	37.5
			075 (0.75 kW)	10	617	{ 63 }	500	500	0.5	1	47.5	47.5	49
				12.5	813	{ 83 }	490	500	1	2	47.5	47.5	49
				15	980	{ 100 }	408	490	2	4.5	47.5	47.5	49
				20	*2,000	{ *204 }	306	367	5	9	47.5	47.5	49
				25	*2,000	{ *204 }	245	294	10	10	47.5	47.5	49
				30	*2,000	{ *204 }	204	245	10	10	47.5	47.5	49
				40	*2,000	{ *204 }	153	183	9	10	47.5	47.5	49
				50	*2,000	{ *204 }	122	147	7	8	47.5	47.5	49
		1,500	040 (0.4 kW)	60	*2,000	{ *204 }	102	122	6	7	40	40.5	42
				80	*2,000	{ *204 }	76	91	4.5	5.5	40	40.5	42
				100	*2,000	{ *204 }	61	73	4	4.5	40	40.5	42
			075 (0.75 kW)	10	617	{ 63 }	500	500	0.5	1	51.5	52	53.5
				12.5	813	{ 83 }	490	500	1	2	51.5	52	53.5
				15	980	{ 100 }	408	490	2	4.5	51.5	52	53.5
				20	*1,392	{ *142 }	306	367	5	9	51.5	52	53.5
				25	*1,765	{ *180 }	245	294	10	10	51.5	52	53.5
				30	*2,000	{ *204 }	204	245	10	10	51.5	52	53.5
				40	*2,000	{ *204 }	153	183	9	10	51.5	52	53.5
				50	*2,000	{ *204 }	122	147	7	8	51.5	52	53.5
		2,000	040 (0.4 kW)	60	*1,200	{ *122 }	102	122	6	7	44.5	44.5	46
				80	*1,200	{ *122 }	76	91	4.5	5.5	44.5	44.5	46
				100	*1,200	{ *122 }	61	73	4	4.5	44.5	44.5	46
			075 (0.75 kW)	10	617	{ 63 }	500	500	0.5	1	56	56.5	58
				12.5	813	{ 83 }	490	500	1	2	56	56.5	58
				15	980	{ 100 }	408	490	2	4.5	56	56.5	58
				20	*1,200	{ *122 }	306	367	5	9	56	56.5	58
				25	*1,200	{ *122 }	245	294	10	10	56	56.5	58
				30	*1,200	{ *122 }	204	245	10	10	56	56.5	58
				40	*1,200	{ *122 }	153	183	9	10	56	56.5	58
				50	*1,200	{ *122 }	122	147	7	8	56	56.5	58

Rated thrust values are for operation at 60 Hz.
* Models marked with have torque limits.

Dimensions

ZCA45M□□□EL (Standard input shaft)

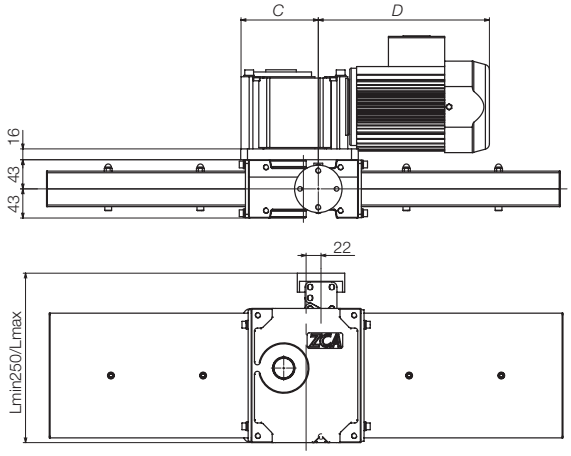

*1 The mounting taps on the drive section base are the same with ZCA45N with no drive (page 15).
*2 The Lmin and Lmax dimensions are the same with ZCA45N.
*3 See the following table for dimensions C, D, G, H, I, and J.

Motor size kW	C mm	D mm	G mm	H mm	I mm	J ϕ
0.4	114	252.5	225.5	268.5	70	ϕ12
0.75	125	330	317	274	98	ϕ27

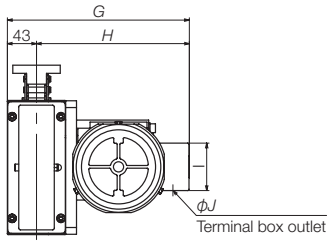

ZCA45M□□□ET (Dual input shaft)

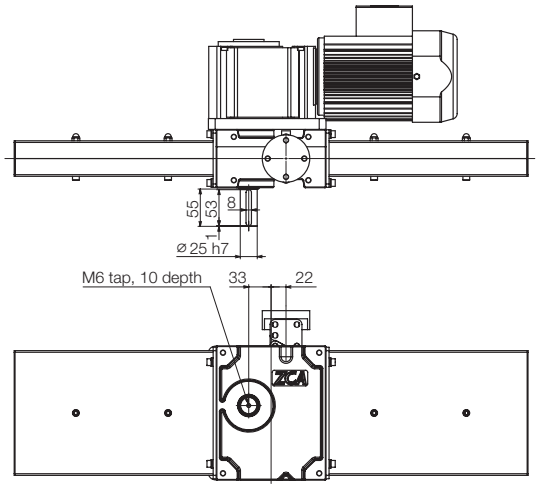

*1 The mounting taps on the drive section base are the same with ZCA45N with no drive (page 15).
*2 The Lmin and Lmax dimensions are the same with ZCA45N.
*3 See ZCA45M□□□EL with standard input shaft dimension for the motor dimensions.

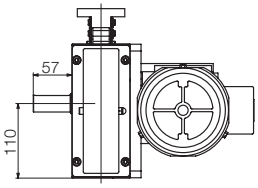

ZCA45M□□□D (Suspending installation)

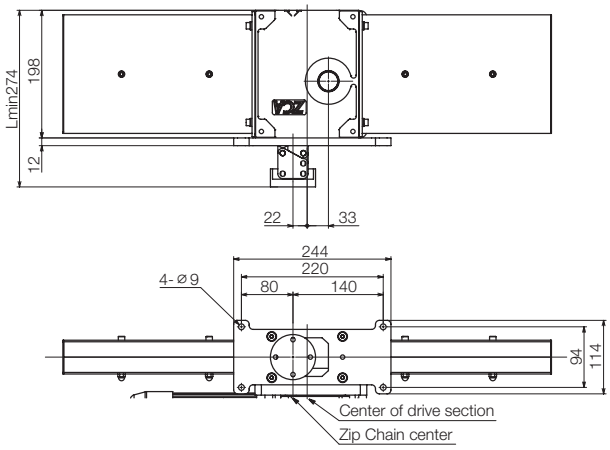

*1 The mounting taps on the drive section base are the same with ZCA45N with no drive (page 15).
*2 The Lmin and Lmax dimensions are the same with ZCA45N.
*3 See ZCA45M□□□EL with standard input shaft dimension for the motor dimensions.

MEMO

ZIP CHAIN ACTUATOR®

Technical Data

Product Selection

Selection Chart

The chart to the right presents the relationship between stroke and basic capacity.
Select a suitable model by confirming the required thrust per ZCA and stroke in the chart.
If more detailed examination is necessary, check if the selection suits the application using the calculations shown below.

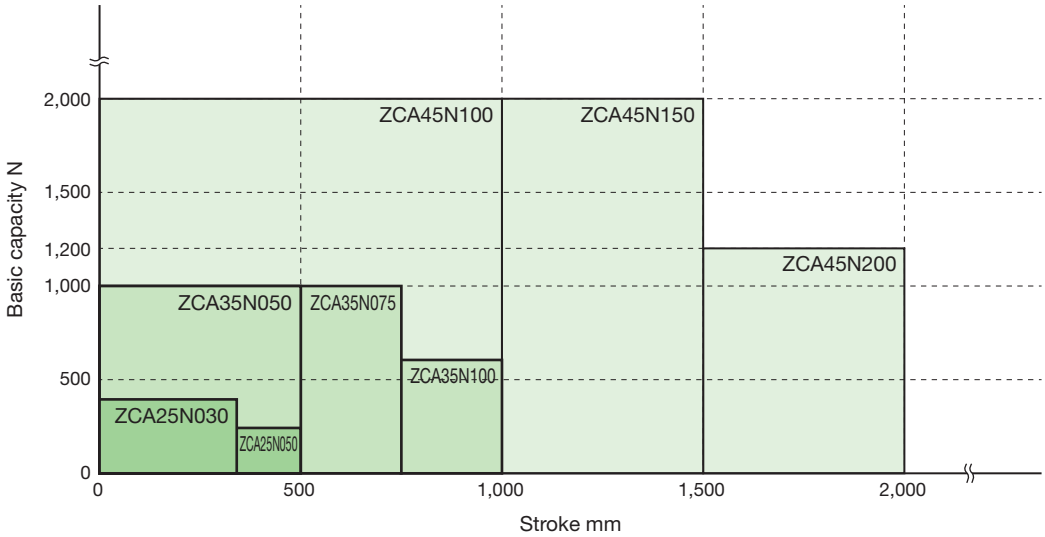

Selection Procedure

(1) Machine used with the unit ····· Machine structure, number of ZCAs to be used, operating environment, etc.
(2) Load ····· Load characteristics, load/workpiece mass, drive source, drive system, etc.
(3) Installation type ····· Mounting direction (lifting, horizontal, suspending), linear guide system
(4) Operating speed ····· Speed required for ZCA operation
(5) Stroke ····· Actual stroke to be used

1. Calculate the design load Fs

Consider the characteristics of the load, refer to the service factor (Table 1), and then calculate the design load (Fs).
Design load Fs N {kgf} = Required thrust P N {kgf} × Service factor Sf

Table 1 — Service factor Sf

Load characteristics	Application example	Service factor
Smooth motion with no impact Load inertia: low	Switching a conveyor direction	1.0 to 1.3
Operation with light impact Load inertia: medium	Transfer equipment Raising and lowering lifters	1.3 to 1.5

2. Calculate the thrust required per unit Fs_1

Obtain the thrust required per unit (Fs_1) from the design load (Fs).
If multiple units are operated simultaneously, calculate Fs_1 by referring to the load-sharing factor (Table 2).
Thrust per ZCA Fs_1 N {kgf}
= Design load Fs N {kgf} / (No. of units simultaneously operated × Load-sharing factor Fg)

Table 2 — Load-sharing factor

No. of units operated simultaneously	1	2	4
Load-sharing factor Fg	1.0	0.83	0.69

3. Select model either with no drive section or with hypoid motor

4. Provisionally select the model

Consult the model list to confirm that the thrust per unit Fs_1 is below the basic capacity of ZCA.
When deciding the stroke, ensure some allowance with the actual stroke to be used.
[When model without drive section is selected]
Consult the model list and provisionally select a model according to the thrust per unit and allowable stroke.
Proceed to item 5 and subsequent items.
[When model with hypoid motor is selected]
Consult the model list and provisionally select a model that satisfies the requirements for the thrust per unit, the operating speed of chain, and allowable stroke.
Proceed to item 9 and subsequent items. Refer to the lineup with a hypoid motor (page 19).

5. Check maximum speed

Confirm that the operating speed does not exceed the predetermined maximum speed.

6. Check required input rotation speed

Calculate the required input rotation speed from the operating speed.
N = V × 60/K, N: Input rotation speed r/min, V: Operating speed mm/sec, K: Zip Chain travel distance per input shaft rotation mm (Table 3)

7. Check required input torque

Calculate the required input torque.

$$T = \frac{Fs_1 \times Dp}{2 \times 1{,}000 \times \eta} + To$$

T: Required input torque N·m {kgf·m}
Dp: Sprocket pitch circle diameter mm (Table 3)
To: Mean unloaded operating torque N·m {kgf·m} (Table 3)
Fs_1: Required thrust per unit N {kgf}
η: ZCA overall efficiency (Table 3)

Table 3 — Performance sheet

Model	ZCA25	ZCA35	ZCA45
Overall efficiency η	90%	90%	90%
* Mean unloaded operating torque To N·m {kgf·m}	0.62 {0.063}	1.63 {0.17}	5.85 {0.6}
Zip Chain travel distance per input shaft rotation K mm	95.3	142.9	240
Sprocket pitch circle diameter Dp mm	ϕ30.92	ϕ46.48	ϕ78.0

* Mean value of torque required to continuously rotate input shaft while the unit is unloaded.
Torque varies pitch by pitch, at each chain engagement.

8. Consider allowable overhang load

If the input shaft is driven by a chain, gear, tooth belt, V-belt, etc., make sure that the overhang load is lower than the allowable value shown below.

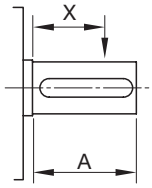

Table 4 — Transmission element factor (f)

Chain	Gear, Tooth belt	V-belt
1.0	1.25	1.5

Table 5 — Load position factor (Lf)

X/A	0.25	0.5	0.75	1.0
Lf	0.9	1.0	1.15	1.25

O.H.L.: Overhang load N {kgf}
f: Transmission element factor (Table 4)
Lf: Load position factor (Table 5)
T: Required input torque N·m {kgf·m}
D: Pitch circle diameter of sprocket, gear, pulley, etc. m

$$\text{Allowable O.H.L.} \geq \frac{2 \times T \times f \times Lf}{D}$$

Table 6 — Allowable overhang load

Model	ZCA25N	ZCA35N	ZCA45N
Allowable overhang load N {kgf}	638 {65.0}	946 {96.4}	2,065 {210.5}

9. Select optional accessories

Select optional accessories according to the operating conditions.
• Mounting base • Cap • Bellows • Grease plate

10. Decide the model

11. Calculate required input capacity (for model without motor)

Required input capacity P kW = T × N / 9550
Note: When the mean unloaded operating torque makes up 25% or more of the required input torque, the torque fluctuation caused by the chains engaging becomes larger. For smooth operation of the unit, select a model by increasing the mean unloaded operating torque (Table 3) as 1.5 times.

Be careful when selecting required input torque

When ZCA units are arranged in tandem as shown below, confirm that the allowable input shaft torque is less than the required torque of the drive source.

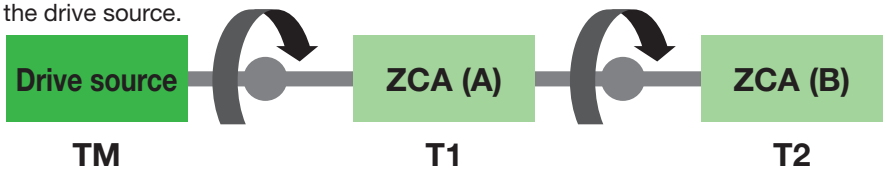

Two units' worth of required input torque is being transmitted to the input shaft on ZCA (A) on the drive source side.
Confirm that the combined torque of the two units falls below the allowable input shaft torque.

T1: Required input torque on ZCA (A)
T2: Required input torque on ZCA (B)
TM = T1 + T2 < allowable input shaft torque: Drive source required torque

Selection Example

(1) Equipment ····· Lifter using two ZCA units, indoor use (factory, ambient temperatures, no dust)
(2) Required thrust ····· Light impact, 1200 N {122 kgf}/2 units, geared motor with brake installed separately and connected by couplings
(3) Installation ····· Four guide poles (lifting installation)
(4) Operating speed ····· (Rated speed: Acceleration/deceleration not determined)
(5) Stroke ····· 450 mm
(6) Power ····· 200 V/60 Hz

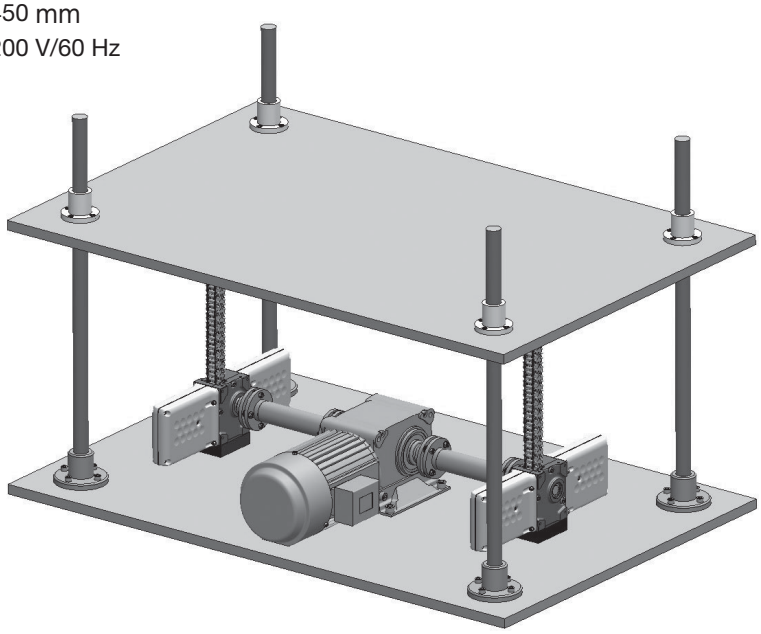

SI Units

• ZCA

1. Design load Fs (with service factor Sf = 1.3) is
   Fs = 1,200 × 1.3 = 1,560 N
2. There are two units operating (Fg = 0.83), so thrust Fs_1 per unit is
   Fs_1 = 1,560 ÷ (2 × 0.83) = 939.8 N
3. A gear motor with brake is installed separately, so there is no motor on the ZCA.
4. Based on thrust and stroke per unit,
   ZCA35N050 is provisionally selected.
   939.8 N < 1,000 N(ZCA35N050 allowable thrust)
5. The operating speed is 250 mm/sec < 1000 mm/sec, so the speed falls below the allowable speed.
6. Required input rotation speed is
   N = 250 × 60 ÷ 142.9 = 105 r/min
7. Required input torque per ZCA unit is
   T = 939.8 × 46.48 ÷ (2 × 1,000 × 0.9) + 1.63
   = 25.9 N•m < 34.7 N•m(Allowable input shaft torque)
   Required input capacity is P = 25.9 × 2 × 105 ÷ 9550 = 0.57 kW
8. The units are connected by couplings, so there is no need to confirm overhang load.
9. Selecting options
   Due to the layout, one ZCA has the input shaft on the opposite side (option).
10. From above, ZCA35N050EL and ZCA35N050ER are selected.

{Gravimetric Units}

• ZCA

1. Design load Fs (with service factor Sf = 1.3) is
   Fs = 122 × 1.3 = 158.6 kgf
2. There are two units operating (Fg = 0.83), so thrust Fs_1 per unit is
   Fs_1 = 158.6 ÷ (2 × 0.83) = 95.6 kgf
3. A gear motor with brake is installed separately, so there is no motor on the ZCA.
4. Based on thrust and stroke per unit,
   ZCA35N050 is provisionally selected.
   95.6 kgf < 102 kgf (ZCA35N050 allowable thrust)
5. The operating speed is 250 mm/sec < 1000 mm/sec, so the speed falls below the allowable speed.
6. Required input rotation speed is
   N = 250 × 60 ÷ 142.9 = 105 r/min
7. Required input torque per ZCA unit is
   T = 95.6 × 46.48 ÷ (2 × 1,000 × 0.9) + 0.17
   = 2.64 kgf•m < 3.53 kgf•m (Allowable input shaft torque)
   Required input capacity is P = 2.64 × 2 × 105 ÷ 974 = 0.57 kW
8. The units are connected by couplings, so there is no need to confirm overhang load.
9. Selecting options
   Due to the layout, one ZCA has the input shaft on the opposite side (option).
10. From above, ZCA35N050EL and ZCA35N050ER are selected.

SI Units

• Motor (60 Hz)

1. Reduction ratio
   According to the table of hypoid motor characteristics, the output RPM closest to 60 Hz and 105 rpm would be 120 rpm with a reduction ratio of 1/15.
2. Motor size selection
   P = 51.8 × 105 ÷ 9,550 = 0.57 (Select 0.6 kW or larger motor.)
   From the above, select HMTR075-38L15TB, a 0.75 kW hypoid motor with foot mount type, and with brake.
   For more information, refer to information on Tsubaki gear motor catalogue.

• Coupling

1. Coupling rpm is 105 rpm
2. Torque on coupling: 25.9 N·m
   25.9 × 2.5 (coupling service factor) = 64.8 N·m
   From 64.8 N·m < 98 N·m (NEF10W-J allowable torque), ECHT-FLEX® Coupling NEF10W-J would be ideal.

{Gravimetric Units}

• Motor (60 Hz)

1. Reduction ratio
   According to the table of hypoid motor characteristics, the output RPM closest to 60 Hz and 105 rpm would be 120 rpm with a reduction ratio of 1/15.
2. Motor size selection
   P = 5.28 × 105 ÷ 974 = 0.57 (Select 0.6 kW or larger motor.)
   From the above, select HMTR075-38L15TB, a 0.75 kW hypoid motor with foot mount type, and with brake.
   For more information, refer to information on Tsubaki gear motor catalogue.

• Coupling

1. Coupling rpm is 105 rpm
2. Torque on coupling: 2.64 kgf·m
   2.64 × 2.5 (coupling service factor) = 6.6 kgf·m
   From 6.6 kgf·m < 10 kgf·m (NEF10W-J allowable torque), ECHT-FLEX® Coupling NEF10W-J would be ideal.

When position control is needed, use a motor with an encoder or a servomotor.
(Contact a Tsubaki representative about using a motor with an encoder.)

The selection example above is just an example. Refer to the appropriate catalog when selecting the coupling, miter gear box, and motor.

Drive source

TA/TR Series hypoid motor

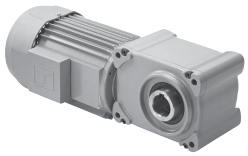

- Using a high-efficiency hypoid gear, TA/TR Series are a compact geared motor with minimal height.
- Easy to use design with Tsubaki grease type gear motor and also available with multi stop positioning control with encoder type option.

Miter gear box

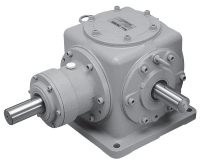

- The miter gear box ensures synchronized operation of multiple Zip Chain Actuators.
- A wide variety of options for standard models, including size, shaft arrangement, speed ratio, and material.

Coupling

- Lubrication-free high-precision coupling is also available for servomotor drive options.
- A wide variety of shaft coupling methods—including keyways, clamps, and taper locks—and detailed shaft bore machining at 1 mm increments.

Wiring, Chain Direction of Travel

Wiring, Rotation Direction

1. Wiring

With three-phase motor (60 W to 0.75 kW)	
U V W R S T	U V W T S R
A	B

2. Rotation Direction

The table below shows the chain direction of travel at wiring A and B.

■With hypoid motor

	Size	Motor size	Reduction ratio	Wiring A	Wiring B
ZCA	25	90 W	10	⇧	⬇
			15		
			20		
			25		
			30		
		60 W	40		
			50		
			60		
	35	0.4 kW	10	⬇	⇧
			12.5		
			15		
			20		
			25		
			30		
		0.2 kW	40	⇧	⬇
			50		
			60		
	45	0.75 kW	10	⬇	⇧
			12.5		
			15		
			20		
			25		
			30		
			40	⇧	⬇
			50		
		0.4 kW	60		
			80		
			100		

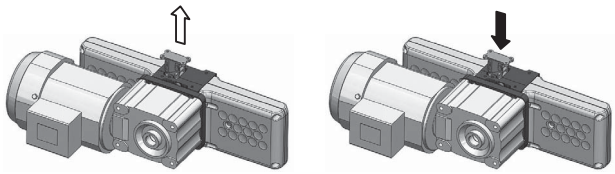

Standard Terminal Box Specifications

1. Motor size: 0.2 kW / 0.4 kW (resin) *ZCA35/45

Terminal box dimensions

With brake

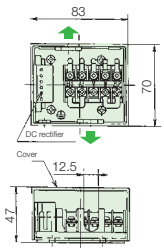

1. Terminal screw size: M3.5 (tightening torque: 0.8 N·m {0.08 kgf·m})
2. Ground terminal screw size: M4 (tightening torque: 1.2 N·m {0.12 kgf·m})
3. The terminal box outlet direction can be changed as desired according by changing cover direction.

Terminal box position

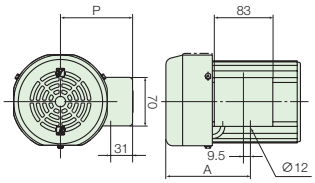

Motor size	A	P
0.2 kW	119.5	104.5
0.4 kW	119.5	104.5

2. Motor size: 0.75 kW (steel) *Applies to ZCA45

Terminal box dimensions

With brake

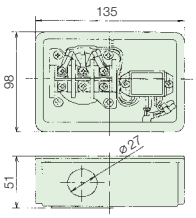

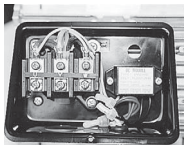

1. Terminal screw size: M4 (tightening torque: 1.2 N·m {0.12 kgf·m})
2. Ground terminal screw size: M4 (tightening torque: 1.2 N·m {0.12 kgf·m})

Terminal box position

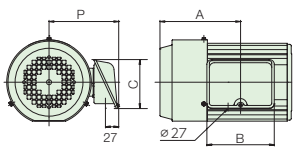

Motor size	A	B	C	P
0.75 kW	161.5	135	98	140

Inverter Drive

ZCA25M motors (60 W, 90 W)

A 200 V class motor can be driven from the inverter unless it is operated at low frequency or a frequency of 60 Hz or higher. In addition, 400 V class motor cannot be driven from the inverter.

ZCA35M, ZCA45M motors (0.2 kW or more)

The maximum operating frequency is 120 Hz, and the low Hz range (low frequency) should be used within the allowable range of the inverter. The 0.75 kW motor type is also capable of constant torque operation between 6 Hz and 60 Hz using a standard motor.

Frequency and torque characteristics on 0.2 kW or larger motor

At high speeds, torque decreases inversely in proportion to the rotation speed because the power becomes constant at kW. In addition, as the rotation speed increases, motor noise, motor fan noise, reduction gear noise, and vibrations also increase.
At low speeds, the operating and cooling efficiency of the motor decreases, so temperature raises. It required to limit the torque to use.

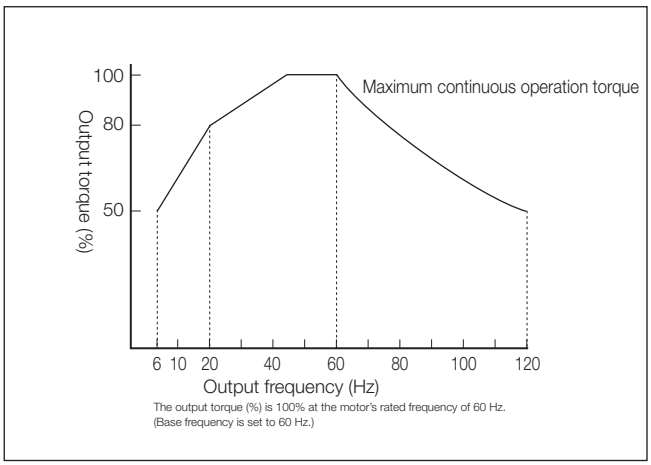

With a 0.2 Kw or 0.4 kW motor

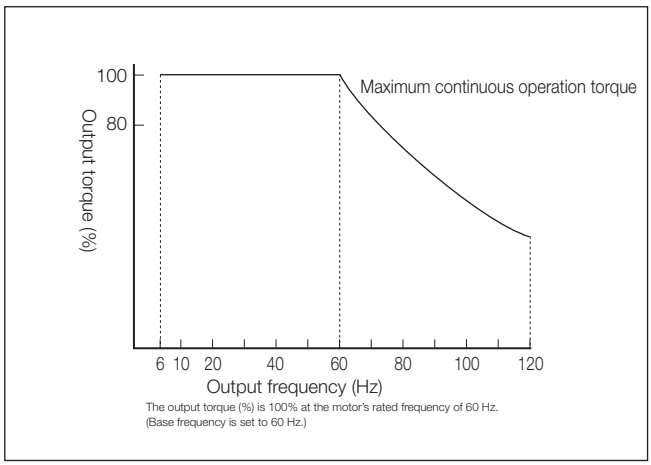

With a 0.75 kW motor

Notes on braking

The brake circuit must be operated individually due to its required power supply. See page 35 for more information.
Standard products are shipped with the brake lead wire screwed together with the motor lead wire. The brake lead wire should be unscrewed and connected individually.
The frequency should be 60 Hz (1,800 r/min) or lower during braking. Braking at high speed range over 60 Hz may cause mechanical damages, and heating and wear on lining. Make sure to operate at 60 Hz or lower frequency.

Using a 400 V class motor for the inverter drive

Devices with a 400 V class motor are available for made to order. With a 400 V class motor, dielectric breakdown may occur due to high voltage surges (microsurges) generated from the inverter switching. As a result, measures against microsurges are generally required for such motors. Tsubaki 400 V class of motor comes standard with micro surge protection. However, with levels in excess of 1250 V, a suppression filter or reactor should be installed on the inverter side.

Other points to note

- Compared with standard power supplies, the inverter drive is greater increases in temperature, noise, and vibration should be expected.
- To protect the motor from overheating, use an electronic thermal mechanism configured to general-purpose motor characteristics, or use a thermal relay or other device between the inverter and the motor.
- When using at a base frequency of 50 Hz, set the output torque to 0.8 times that in the chart above. (With a 0.2 kW or 0.4 kW motor only)
- 0.2 kW and 0.4 kW inverter motors are also available.

Wiring for Hypoid motor with Brake

1. 60 W / 90 W (Standard: 3-phase 200 VAC) *Applies to ZCA25

- Standard products are shipped with AC internal wiring.
- Response times will differ depending on the wiring. Refer to the following and select the wiring that best suits the application.
- For 400 VAC, please contact to Tsubaki.

	Application	Three-phase motor, standard voltage (200 V class)
AC internal wiring	● General use ● Standard shipping specifications	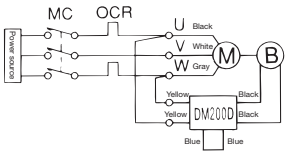
AC external wiring	● To shorten the stop time	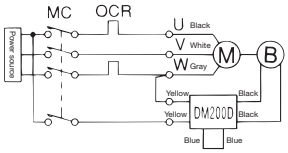
AC external operation	● When operating the brake individually Note: Use an auxiliary relay MCa with a rated load of 200 VAC / 7 A or more.	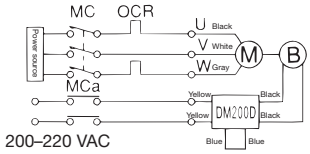
DC external wiring	● When stopping accuracy is required Note: Use 200 VAC / 10 A or more for setting the capacity of locations marked with *.	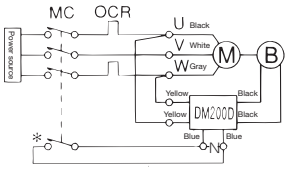

Ⓜ: Motor, Ⓑ: Brake, MC: Magnetic contactor, MCa: Auxiliary relay, OCR: Overcurrent relay, C: Capacitor (accessory)
DM200D: DC rectifier, -N-: Protection element (varistor)
*1 After wiring and before turning on the power, make sure the lead wire of the DC rectifier is yellow (or red) on the power side and black on the brake side.
*2 The DC rectifier contains a diode that will be short-circuited by incorrect wiring, resulting in damage to the DC rectifier.
*3 Add protective elements to the contacts as necessary.
*4 When using an inverter, use only in individual AC operation.
*5 When using individual DC switching, the brake power supply can be damaged depending on the wiring length, wiring method, relay type, or other factors. Connect a varistor between the individual DC switching terminals. Connecting closer to the brake power supply (blue lead wire) will be most effective. The specific models of the varistors are as follows. Select a varistor voltage of 470 V for DM200D.

Product name	Manufacturer	Model
		For DM200D
Surge Absorber	Panasonic	ERZV14D471
Zetrap	Fuji Electric Device Technology	ENE471D-14A
Ceramic Varistor	Nippon Chemi-Con	TND14V-471KB00AAA0

0.2 kW, 0.4 kW, 0.75 kW *for ZCA35 and ZCA45

- Standard products are shipped with AC internal wiring.
- Response times will differ depending on the wiring. Refer to the following and select the wiring that best suits the application.
- For 400 VAC, please contact to Tsubaki.

Application		Three-phase 200 V 0.2 kW•0.4 kW	Three-phase 200 V 0.75 kW
AC internal wiring	● General use ● Standard shipping specifications	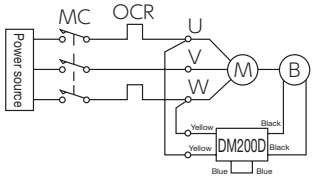	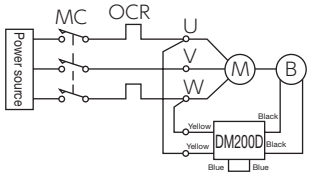
AC external wiring	● To shorten the stop time	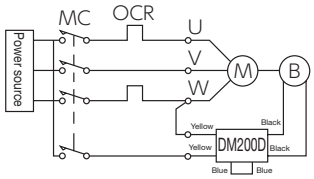	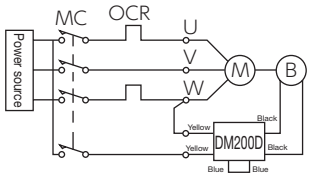
AC external operation	● For inverters (Place the inverter in the MC section) ● When operating the brake individually	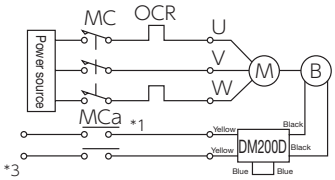 *3 Use a supply voltage of 200–254 VAC for 0.1 to 0.2 kW, and 200–220 VAC for 0.4 kW for the brake shown in the marked section.	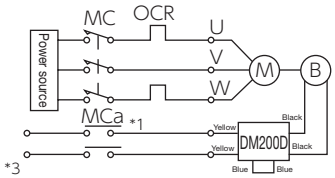 *3 Use a supply voltage of 200–220 VAC for the brake shown in the marked section.
DC external wiring	● When stopping accuracy is required (such as for lifting equipment)	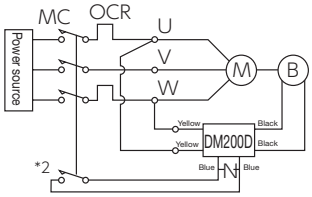	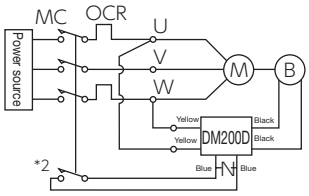

Ⓜ: Motor, Ⓑ: Brake, MC: Magnetic contactor, MCa: Auxiliary relay, OCR: Overcurrent relay, DM200D: DC rectifier
–N–: Protection element (varistor)
*1 The brake voltage is 90 VDC. (When inputting 200 VAC to DM200D)
*2 When using individual DC switching, the brake power supply can be damaged depending on the wiring length, wiring method, relay type, or other factors. Connect a varistor between the individual DC switching terminals. Connecting closer to the brake power supply (blue lead wire) will be most effective. The specific models of the varistors are as follows. Select a varistor voltage of 470 V for DM200D.

Product name	Manufacturer	Model For DM200D
Surge Absorber	Panasonic	ERZV14D471
Zetrap	Fuji Electric Device Technology	ENE471D-14A
Ceramic Varistor	Nippon Chemi-Con	TND14V-471KB00AAA0

*3 For *1 in the table above, use an auxiliary relay (MCa) with a contact capacity of 200 VAC / 7 A or more (resistive load).
When using an MC auxiliary contact or auxiliary relay for *2 in the table above, use a device with a contact capacity of 200 VAC / 10 A or more (resistive load).

Hypoid Motor Brake Characteristics

1. Motor size: 0.2 kW/0.4 kW/0.75 kW *For ZCA35/45

		Hypoid motor		
Motor size	Three-phase	0.2 kW	0.4 kW	0.75 kW
Brake model	Three-phase 200 V	SLB02	SLB04	SLB07E
	Three-phase 400 V	SLB02	SLB04 V	SLB07E 180 V
DC rectifier	Three-phase 200 V	DM200D		
	Three-phase 400 V	DM400D		
Rated torque	Static friction torque [N·m]	1.96	3.92	7.35
	{kgf•m}	0.2	0.40	0.75
	Dynamic friction torque [N·m]	1.57	3.14	5.88
	{kgf•m}	0.16	0.32	0.60
Voltage	Three-phase 200 V	90 VDC		
	Three-phase 400 V	90 VDC		180 VDC
Current at 20℃ A		0.178	0.232	0.273 (0.142)
Capacity at 20℃ W		16.0	20.9	24.6 (25.5)
Initial gap mm		0.15 to 0.20	0.15 to 0.20	0.15 to 0.20
Limit gap mm		0.5	0.5	0.5
Total braking workload	J	1.85×10^8	1.85×10^8	3.66×10^8
	{kgf•m}	1.89×10^7	1.89×10^7	3.73×10^7
Allowable start-up frequency		10 times/min		
Braking delay time S (Reference value)	AC internal wiring	0.15 to 0.21	0.14 to 0.17	0.20 to 0.24
	AC external wiring	0.09 to 0.12	0.06 to 0.09	0.10 to 0.13
	AC external operation	0.09 to 0.12	0.06 to 0.09	0.10 to 0.13
	DC external wiring	0.04 to 0.06	0.03 to 0.05	0.04 to 0.06

*1 The rated torque represents the static friction torque and dynamic friction torque after fitting.
*2 The braking delay time is included as a reference and may differ depending on the braking conditions, operating conditions, and individual differences. To shorten the braking delay time (for lifting equipment, etc.), using DC external wiring is recommended.

2. Motor size: 60 W/90 W *Applies to ZCA25

		Hypoid motor (Mini Series)	
Motor size	Three-phase	60 W	90 W
Brake model	Three-phase	BXW-04-10M-05-90 V	BXW-04-10M-10-90 V
DC rectifier	Three-phase	DM200D	
Rated torque	Static friction torque [N·m] {kgf•cm}	0.6 {6.1}	1.0 {10.2}
	Dynamic friction torque [N·m] {kgf•cm}	0.48 {4.8}	0.8 {8.1}
Operating voltage (V)	Three-phase	90 VDC	
Current (A)	Three-phase	0.076	0.111
Capacity (w)		6.8	10
Gap amount (mm)	Initial value	0.05 to 0.25	
	Limit value (three-phase)	0.4	
Total braking workload J {kgf•m}	Three-phase	16.5×10^6 {16.8×10^5}	13.4×10^6 {13.7×10^5}
Allowable start-up frequency		10 times/min	
Braking delay time S (Reference value)	AC internal wiring	0.08	0.08
	AC external wiring	0.04	0.04
	AC external operation	0.04	0.04
	DC external wiring	0.01	0.01

Hypoid Motor Brake Structure

1. For three-phase 0.2 kW, 0.4 kW, 0.75 kW: Hypoid motor *For ZCA35, ZCA45

SLB brake

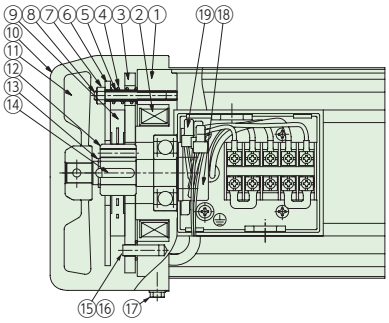

Hypoid motor
[Three-phase 0.2 kW•0.4 kW]

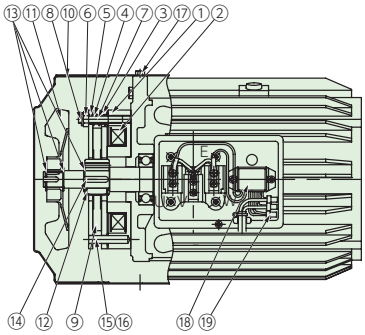

Hypoid motor
[Three-phase 0.75 kW]

1. Anti-load bracket with yoke
2. Coil
3. Armature
4. Push spring
5. Brake plate
6. U-nut
7. Collar
8. Guide bolt
9. Lining
10. Fan cover
11. Fan
12. Square hub
13. Retaining ring
14. Key
15. Spring pin
16. Braking spring
17. Fan cover lock screw
18. DC rectifier
19. Closed-end connector

*** Manual release**

- Release the brake with no load applied to the output shaft.
- Remove the fan cover and attach the screws.
- After releasing the brake, be sure to remove the screws and install the fan cover before operating the unit.

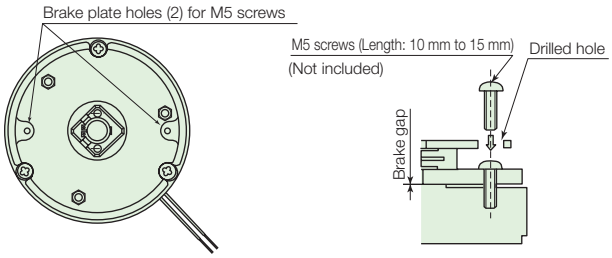

1. For three-phase 60 W to 90 W: Hypoid motor (Mini Series) *For ZCA25

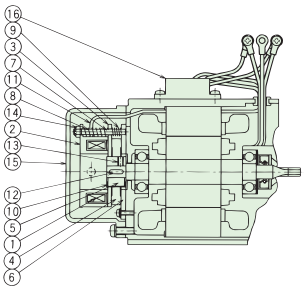

1. Coil
2. Stator
3. Armature
4. Rotor (lining)
5. Rotor hub
6. Mounting flange
7. Stud bolt
8. Torque spring
9. Auxiliary spring
10. Silencer spring
11. Lead wire (with protective tubing)
12. Key
13. Set screw
14. Hexagonal U-nut
15. Brake cover
16. DC rectifier

Options

Grease Plate [Code: F]

1. ZCA25N□□□EL-F

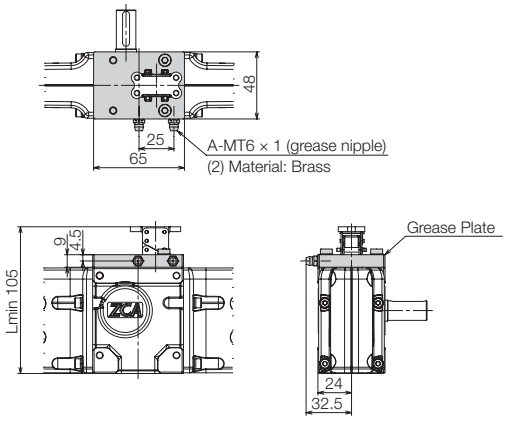

Input shaft on opposite side	Dual input shaft
Greasing directions 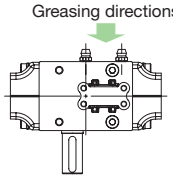	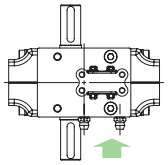 Greasing directions

When attaching grease plates to input shafts on the opposite side or dual shafts, use the grease nipples as shown above. Grease in the direction of the arrows.

The grease plate cannot be retrofitted.
Combining with bellows and mounting bases is possible.
(Contact a Tsubaki representative when using together with a mounting base.)
Grease plates come with grease nipples.
Grease plates that can be attached on either side are made-to-order.
Grease plates aid in chain lubrication.
Grease the nipples in 2 locations.
Refer to the Instruction manual for greasing methods.
Allowable stroke is the same as ZCA25N with no drive.

2. ZCA35N□□□EL-F

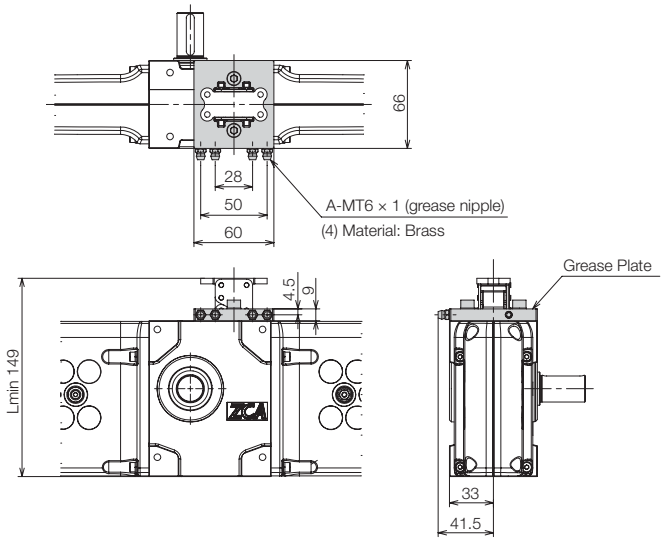

Input shaft on opposite side	Dual input shaft
Greasing directions 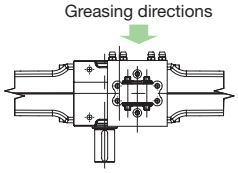	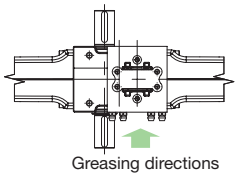 Greasing directions

When attaching grease plates to input shafts on the opposite side or dual shafts, use the grease nipples as shown above. Grease in the direction of the arrows.

The grease plate cannot be retrofitted.
Combining with bellows and mounting bases is possible.
(Contact a Tsubaki representative when using together with a mounting base.)
Grease plates come with grease nipples.
Grease plates that can be attached on either side are made-to-order.
Grease plates aid in chain lubrication.
Grease the nipples in 4 locations.
Refer to the Instruction manual for greasing methods.
Allowable stroke is the same as ZCA35N with no drive.

3. ZCA45N□□□EL-F

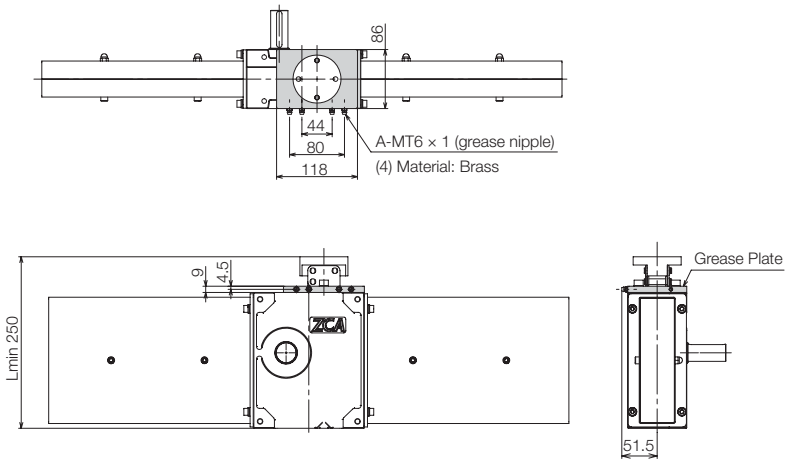

Input shaft on opposite side	Dual input shaft
Greasing directions 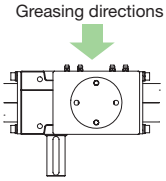	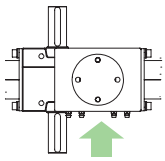 Greasing directions

When attaching grease plates to input shafts on the opposite side or dual shafts, use the grease nipples as shown above. Grease in the direction of the arrows.

The grease plate cannot be retrofitted.
Combining with bellows and mounting bases is possible.
(Contact a Tsubaki representative when using together with a mounting base.)
Grease plates come with grease nipples.
Grease plates that can be attached on either side are made-to-order.
Grease plates aid in chain lubrication.
Grease the nipples in 4 locations.
Refer to the Instruction manual for greasing methods.
Allowable stroke is the same as ZCA45N with no drive.

Bellows (for lifting, suspending) [Code: J1]

1. ZCA25N□□□E□-J1

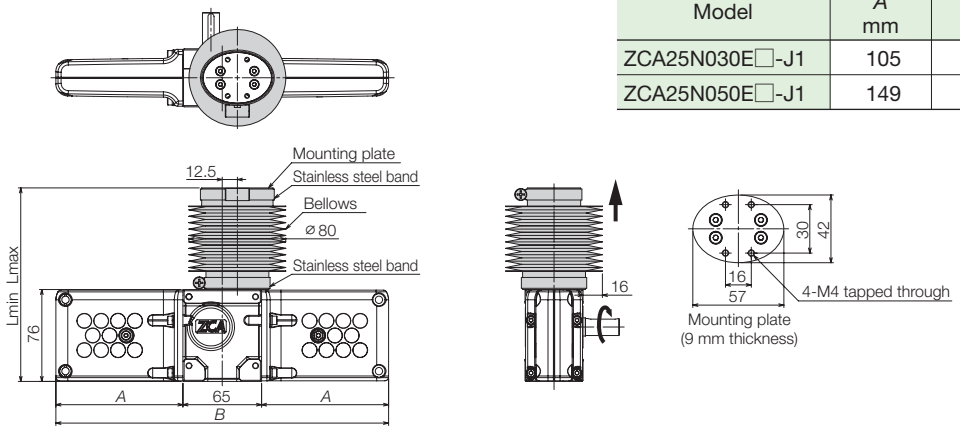

Dimensions

Model	*A* mm	*B* mm	*Lmin* mm	*Lmax* mm
ZCA25N030E□-J1	105	275	160	460
ZCA25N050E□-J1	149	363	180	680

2. ZCA35N□□□E□-J1

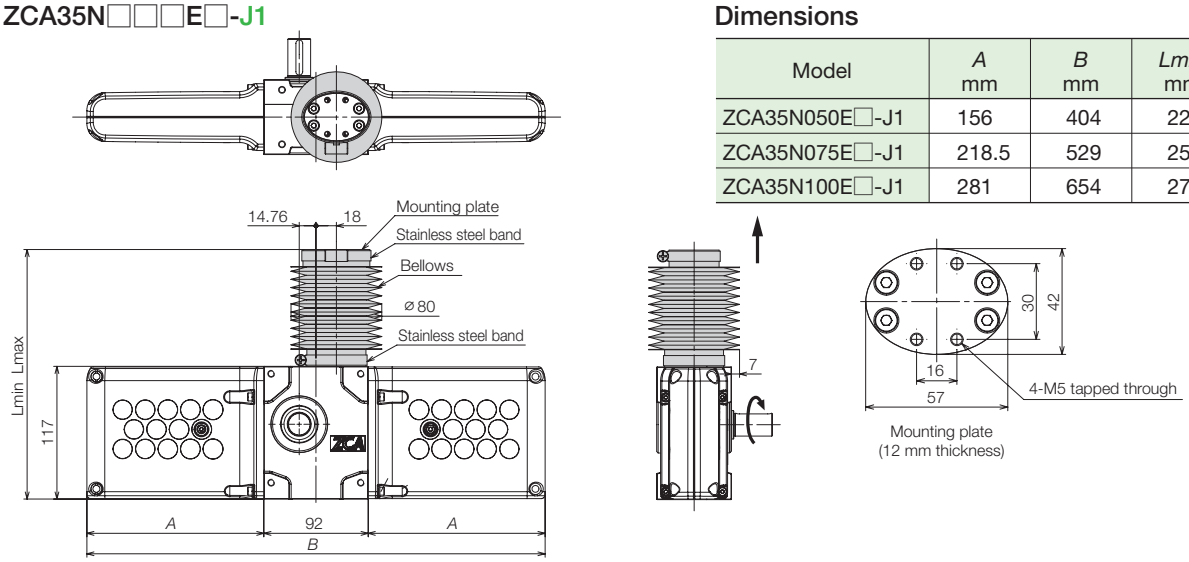

Dimensions

Model	*A* mm	*B* mm	*Lmin* mm	*Lmax* mm
ZCA35N050E□-J1	156	404	220	720
ZCA35N075E□-J1	218.5	529	250	1,000
ZCA35N100E□-J1	281	654	270	1,270

3. ZCA45N□□□E□-J1

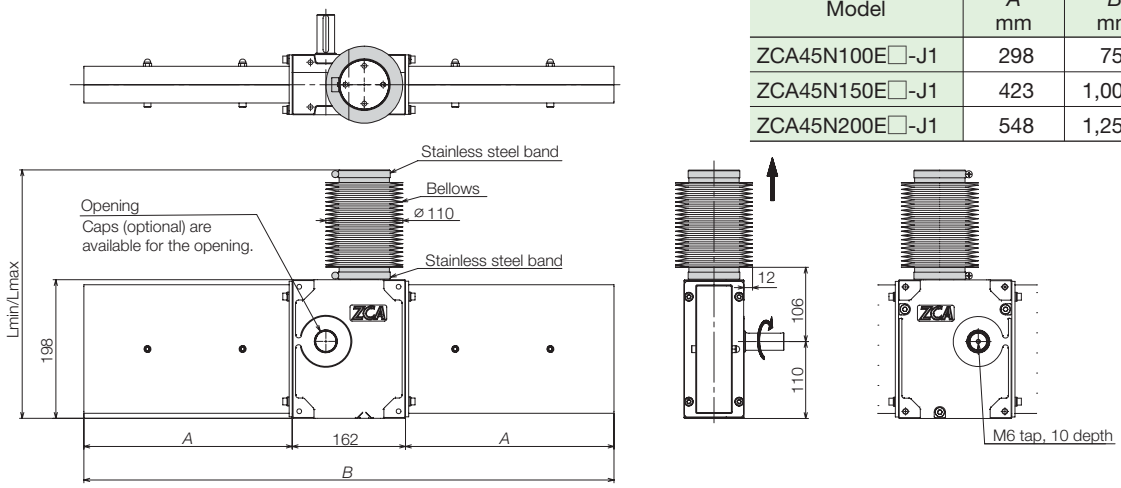

Dimensions

Model	*A* mm	*B* mm	*Lmin* mm	*Lmax* mm
ZCA45N100E□-J1	298	758	355	1,355
ZCA45N150E□-J1	423	1,008	410	1,910
ZCA45N200E□-J1	548	1,258	465	2,465

*1 Each figure shows dimensions for bellows for lifting installations. *2 Bellows can only be installed later with lifting/suspending installations. *3 The allowable stroke will change if attached later. *4 Bellows for suspending installations are paired with a mounting base. Contact a Tsubaki representative for external dimensional diagrams. *5 The design (shape) of the housing section may vary depending on the stroke. For detailed dimensions, refer to the external dimensional diagrams for the applicable model. *6 The bellows is made of thermoformed polyurethane and is in black color. *7 Bellows for horizontal installations (J2) are available upon request, made to order. *8 The characteristics table for the bellows is included on page 10.

Attachable Options

Cap

Caps are available as an option for the opposite side of the input shaft, and must be ordered individually.

Model

ZCA35-CAP: ZCA35N ZCA35M ZCA35K

ZCA45-CAP: ZCA45N ZCA45M ZCA45K

* ZCA25 are with no openings, and cap options are not available.

Caps are to be installed to ZCA at customer side.

Dimensions

ZCA35-CAP

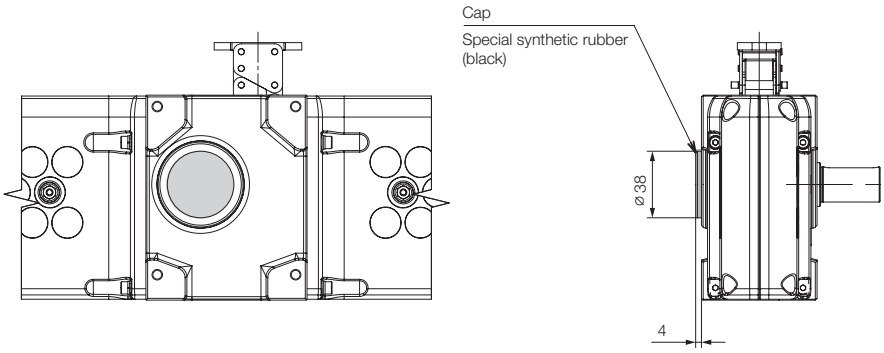

ZCA45-CAP

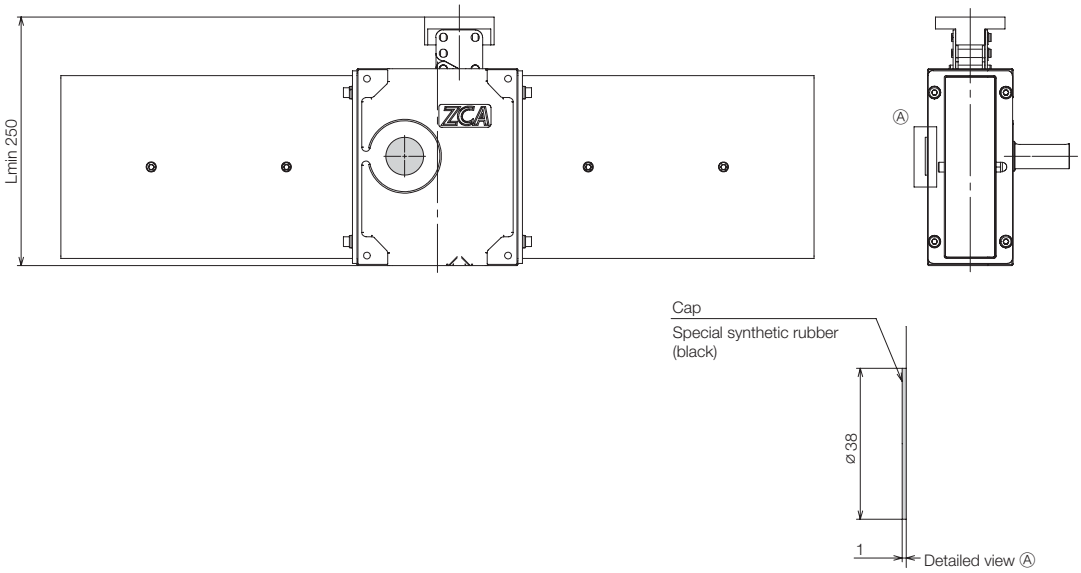

Mounting Base

A base for mounting the Zip Chain Actuator on a flange.

The mounting base is available as an option and must be ordered individually.

Mount bases are to be installed at customer side, and must be ordered individually.

* Installing mounting base to ZCA unit may not be possible when ZCA is with bellows or grease plate. Tsubaki will install and ship for these cases, and please request for quote before ordering.

Table 1 — Mounting base models and applications

○ : Standard product △ : Made-to-order (Only factory installation)

	Mounting base			Bottom mounting base	
	ZCA25N-B1	(ZCA25N-B2)	ZCA25M-B	ZCA25N-S	ZCA25M-S
ZCA25N030/050□L (without options)	○			○	
ZCA25N030/050□T (without options)	○			○	
ZCA25N030/050□□-J1 (with options)		△		○	
ZCA25N030/050□□-F (with options)		△		○	
ZCA25M(K)030/050□L (with hypoid motor/TERVO)			○		○
ZCA25M(K)030/050□T (with hypoid motor/TERVO)			○		○
ZCA25M(K)030/050□□-J1 (with hypoid motor/TERVO)			△		○
ZCA25M(K)030/050□□-F (with hypoid motor/TERVO)			△		○

	Mounting base		Bottom mounting base	
	ZCA35N-B	ZCA35M-B	ZCA35N-S	ZCA35M-S
ZCA35N050/075/100□L (without options)	○		○	
ZCA35N050/075/100□T (without options)	○		○	
ZCA35N050/075/100□□-J1 (with options)		△	○	
ZCA35N050/075/100□□-F (with options)		△	○	
ZCA35M(K)050/075/100□L (with hypoid motor/TERVO)		○		○
ZCA35M(K)050/075/100□T (with hypoid motor/TERVO)		○		○
ZCA35M(K)050/075/100□□-J1 (with hypoid motor/TERVO)		△		○
ZCA35M(K)050/075/100□□-F (with hypoid motor/TERVO)		△		○

	Mounting base		Bottom mounting base	
	ZCA45N-B	ZCA45M-B	ZCA45N-S	ZCA45M-S
ZCA45N100/150/200□L (without options)	○		○	
ZCA45N100/150/200□T (without options)	○		○	
ZCA45N100/150/200□□-J1 (with options)	△		○	
ZCA45N100/150/200□□-F (with options)	△		○	
ZCA45M(K)100/150/200□L (with hypoid motor/TERVO)		○		○
ZCA45M(K)100/150/200□T (with hypoid motor/TERVO)		○		○
ZCA45M(K)100/150/200□□-J1 (with hypoid motor/TERVO)		△		○
ZCA45M(K)100/150/200□□-F (with hypoid motor/TERVO)		△		○

Mounting method

Four bolts are attached with mounting base, and required to tighten with following table.

Mounting base bolt information

	ZCA25	ZCA35	ZCA45
Diameter	M5	M6	M8
Tightening torque	5.4 N•m	9.2 N•m	22.0 N•m
Strength class	10.9		

* See pages 43 to 46 for outline dimension with bolts

Attachable Options

ZCA25 Mounting Base

ZCA25N-B1 (without options)

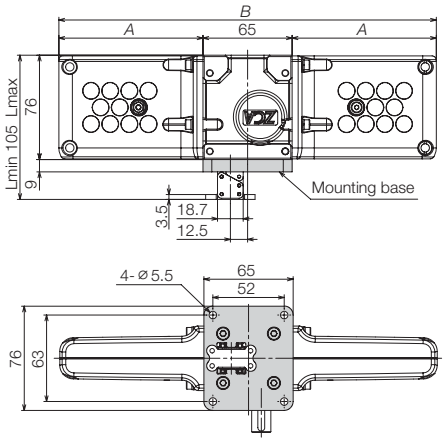

Dimensions

Stroke mm	*A* mm	*B* mm	*Lmin* mm	*Lmax* mm	Allowable stroke mm
300	105	275	105	405	300
500	149	363	105	505	500

Dimension is for ZCA25N030-□S, and ZCA25N050 housing section dimension is not the same.

ZCA25N-B2 (with options)

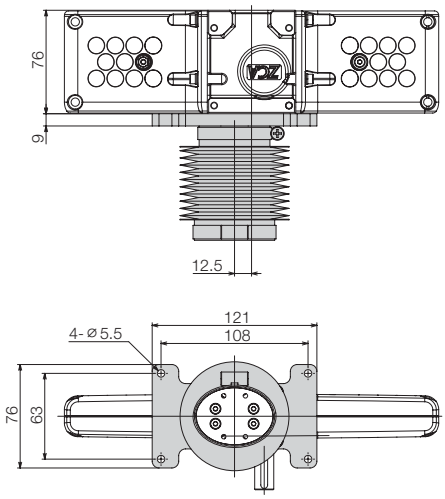

Dimensions

Stroke mm	*A* mm	*B* mm	*Lmin* mm	*Lmax* mm	Allowable stroke mm
300	105	275	169	469	300
500	149	363	169	669	500

ZCA25M-B (with hypoid motor)

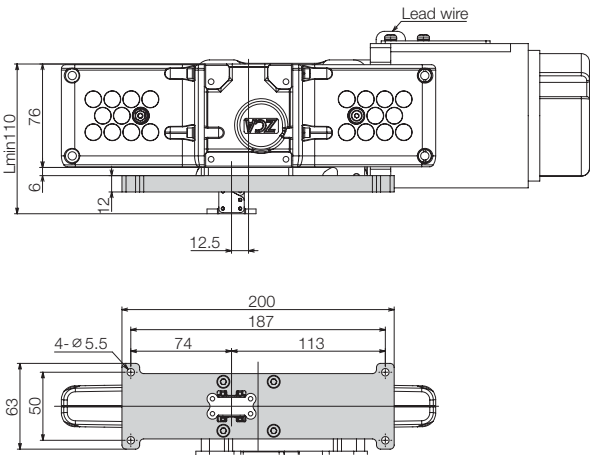

Dimensions

Stroke mm	*A* mm	*B* mm	*Lmin* mm	*Lmax* mm	Allowable stroke mm
300	105	275	110	410	300
500	149	363	110	610	500

* The effective stroke will be shortened when retrofitting.
(ST300 Lmax:405 mm Allowable stroke: 295 mm,
ST500 Lmax:605 mm Allowable stroke: 495 mm)

ZCA25 Bottom Mounting Base

ZCA25N-S (with no drive section)

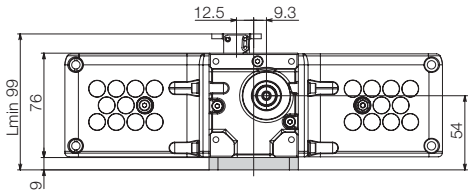

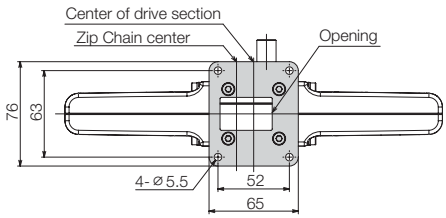

Dimensions

Stroke mm	*A* mm	*B* mm	*Lmin* mm	*Lmax* mm	Allowable stroke mm
300	105	275	99	399	300
500	149	363	99	599	500

External dimensional diagram is for ZCA25N030DL.
The shape of the 050 housing section differs.
See Table 2 on page 11 for dimensions A, B, and L.

ZCA25M-S (with hypoid motor)

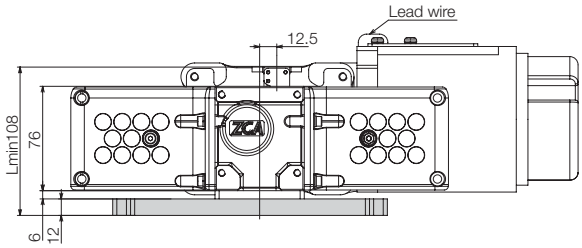

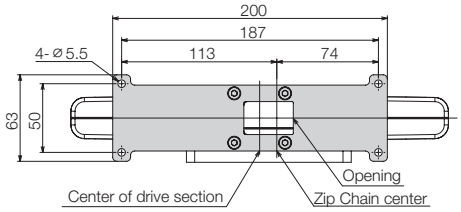

Dimensions

Stroke mm	*A* mm	*B* mm	*Lmin* mm	*Lmax* mm	Allowable stroke mm
300	105	275	108	408	300
500	149	363	108	608	500

Attachable Options

ZCA35 Mounting Base/Bottom Mounting Base

ZCA35N-B (without options)

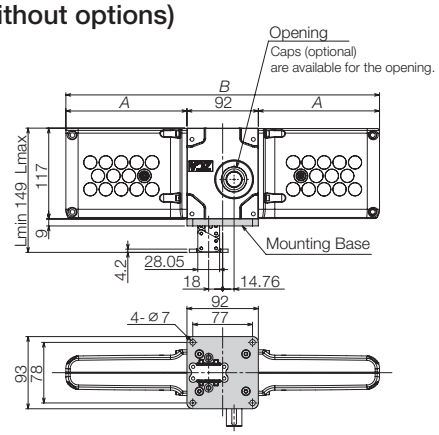

Dimensions

Stroke mm	*A* mm	*B* mm	*Lmin* mm	*Lmax* mm	Allowable stroke mm
500	156	404	149	649	500
750	218.5	529	149	799	750
1,000	281	654	149	1,149	1,000

External dimensional diagram is for ZCA35N050-□B.
The shape of the 075 and 100 housing sections differ.

ZCA35M-B (with options) (with hypoid motor)

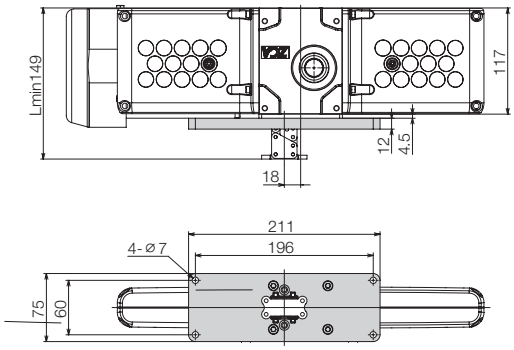

Dimensions

Stroke mm	*A* mm	*B* mm	*Lmin* mm	*Lmax* mm	Allowable stroke mm
500	156	404	149	649	500
750	218.5	529	149	799	750
1,000	281	654	149	1,149	1,000

ZCA35N-S (with no drive section)

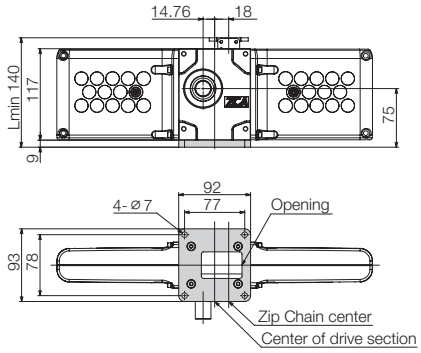

Dimensions

Stroke mm	*A* mm	*B* mm	*Lmin* mm	*Lmax* mm	Allowable stroke mm
500	156	404	140	640	500
750	218.5	529	140	790	750
1,000	281	654	140	1,140	1,000

External dimensional diagram is for ZCA35N050-□B.
The shape of the 075 and 100 housing sections differ.

ZCA35M-S (with hypoid motor)

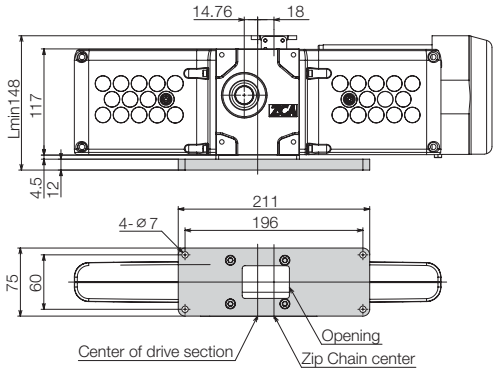

Dimensions

Stroke mm	*A* mm	*B* mm	*Lmin* mm	*Lmax* mm	Allowable stroke mm
500	156	404	148	648	500
750	218.5	529	148	798	750
1,000	281	654	148	1,148	1,000

ZCA45 Mounting Base/Bottom Mounting Base

1. ZCA45N-B (with no drive section)

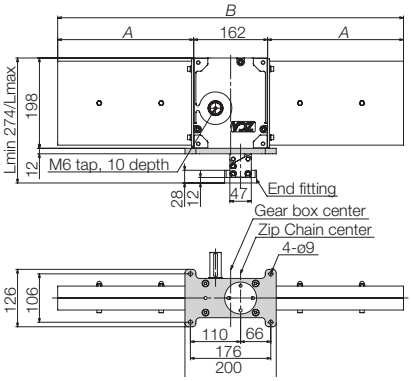

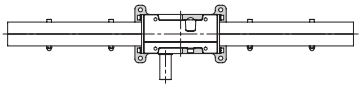

Dimensions

Stroke mm	*A* mm	*B* mm	*Lmin* mm	*Lmax* mm	Allowable stroke mm
1,000	298	758	274	1,274	1,000
1,500	423	1,008	274	1,774	1,500
2,000	548	1,258	274	2,274	2,000

2. ZCA45M-B (with hypoid motor)

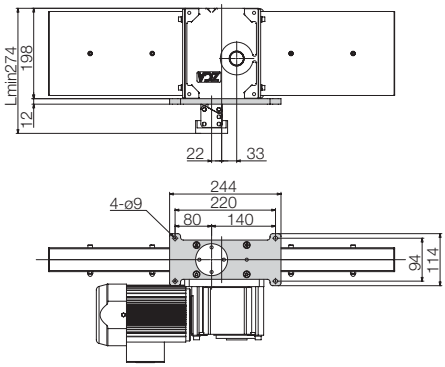

Dimensions

Stroke mm	*A* mm	*B* mm	*Lmin* mm	*Lmax* mm	Allowable stroke mm
1,000	298	758	274	1,274	1,000
1,500	423	1,008	274	1,774	1,500
2,000	548	1,258	274	2,274	2,000

3. ZCA45N-S (with no drive section)

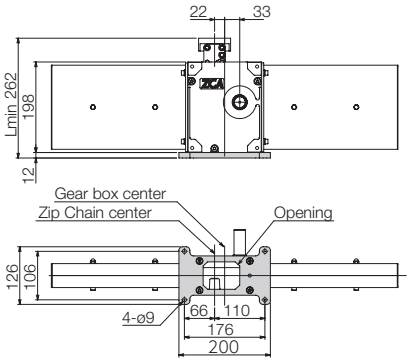

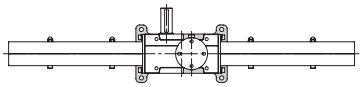

Dimensions

Stroke mm	*A* mm	*B* mm	*Lmin* mm	*Lmax* mm	Allowable stroke mm
1,000	298	758	262	1,262	1,000
1,500	423	1,008	262	1,762	1,500
2,000	548	1,258	262	2,262	2,000

4. ZCA45M-S (with hypoid motor)

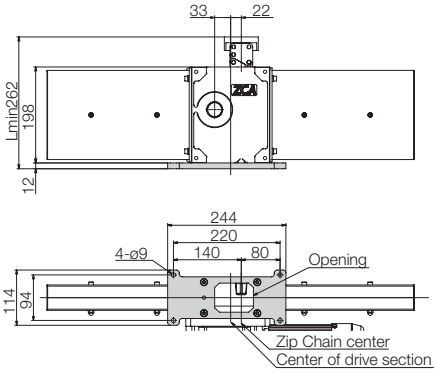

Dimensions

Stroke mm	*A* mm	*B* mm	*Lmin* mm	*Lmax* mm	Allowable stroke mm
1,000	298	758	262	1,262	1,000
1,500	423	1,008	262	1,762	1,500
2,000	548	1,258	262	2,262	2,000

Q & A

Q1 Is lateral load allowed?

A **No lateral load is allowed.**
Make sure to install a linear guide in the direction of travel.

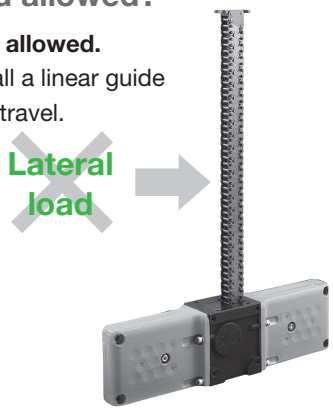

Q2 How should I perform maintenance?

A For the standard lubrication cycle under normal application, refer to "Table 3 — Lubrication cycle reference" on page 50 of this catalog.
The lubrication cycle may vary depending on the frequency and condition of usage.
For details, refer to the operator's manual.

Q3 How should I grease the product?

A When lubricating the Zip Chain, first remove the old grease with a brush or the like, and then evenly apply grease directly to the entire Zip Chain with a brush or the like. For details of the amount and method of greasing, refer to the operator's manual.

Q4 What is the service life?

A Reference timing of replacement as a service life limitation is 4000 km of travel distance, or 6 million cycles for ZCA25, 4 million cycles for ZCA35, and 2 million cycles for ZCA45; whichever is reached first.

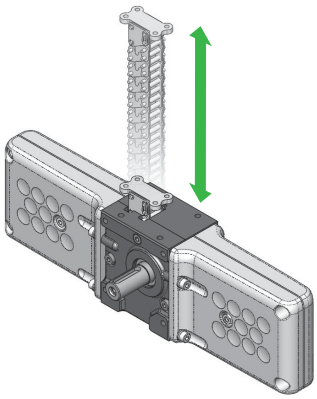

- **For ZCA25:**
  Approx. 6 million cycles or distance of 4000 km
- **For ZCA35:**
  Approx. 4 million cycles or distance of 4000 km
- **For ZCA45:**
  Approx. 2 million cycles or distance of 4000 km

Whichever is reached first

Q5 Can I replace the chain only?

A **Replacing the chain only is not possible.**
A ZCA that has reached its service life needs to be replaced, including the entire main body. Reaching the service life also means reaching that of the bearings in use. Replace the bearings along with the ZCA.

Replacing the chain only is not possible. Replacement of the entire device is required.

Q6 How much does the Zip Chain deflect when installed in the horizontal direction?

A Chain deflection may occur just by the weight of the chain when it is pulled out from the main body for the full stroke.
The amount of deflection increases as the number of operation cycles increases.
Make sure to install a linear guide when installing in the horizontal direction.

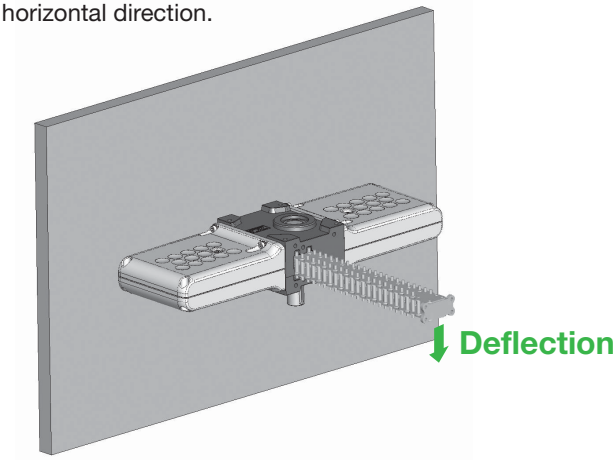

Q7 Can the bellows be mounted in a horizontal installation?

A The bellows will break early due to interference with the chains in horizontal/vertical/lateral installations.
Dedicated bellows with special parts is required.
Contact a Tsubaki representative for more information.

Q8 Is it possible to add bellows later?

A **Adding bellows later is possible.**
However, bellows for horizontal installation cannot be added later, so specify whether bellows are required when ordering.
The allowable stroke may change when adding bellows later. Contact a Tsubaki representative for more information.

Adding bellows later is possible. For details, check with Tsubaki when ordering.

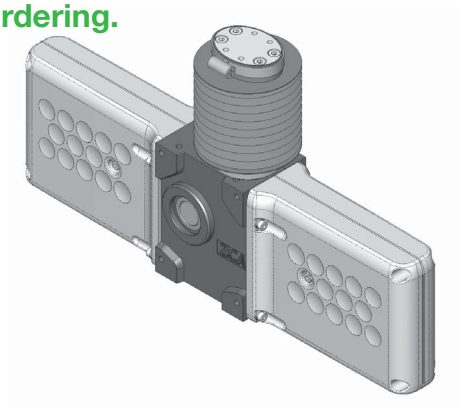

Q9 Does the stroke range have any margin?

A Make sure to **use the product within the lower and upper limit of the stroke range** described in the catalog, without relying on the margin.

Q10 Is there any caution for suspending installations?

A **A guide and a safeguard must be installed just in case the chain breaks.** Also install a safety fence, and never enter the area underneath the suspended object.

Q11 Can the chain fall out?

A **The structure prevents the chain from falling out** thanks to a stopper at the end of the chain.
However, this is for preventing the chain from falling out during emergencies. Never use this structure to stop the chain from falling out in order to restrict the stroke in normal applications. Doing so is dangerous because the stopper may break, resulting in the chain falling out.

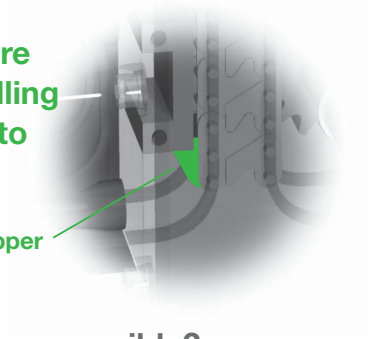

Q12 Is outdoor use possible?

A **Outdoor specifications are not available** for this device.

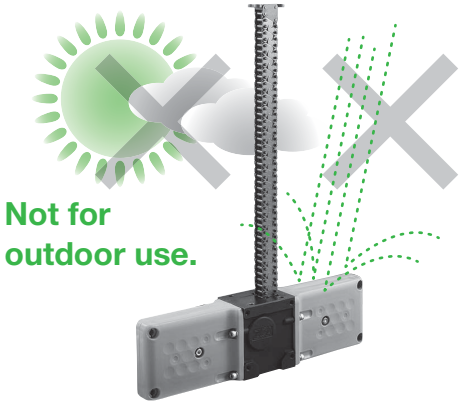

Q13 Is basic capacity the same as the load that can be held?

A For the ZCA, **the basic capacity is same as the load that can be held during stop.**

Q14 Can I use the end of the chain as a stopper?

A **Never use the stroke end of the chain as a stopper.** Stopping at the stroke end may cause serious damage to the parts inside the main body.

Q15 Is it possible to synchronize two ZCAs by matching the positions of the input shaft keyways?

A Differences between units due to backlash may cause small misalignments of the input shaft keyway positions at the lower stroke limit. **Separately install a mechanism to adjust phases.**

Handling

Installation Precautions

1. The ZCA uses grease for lubrication, which may lead to spattering. Take appropriate precautions to avoid any adverse effect on the usage environment. In particular, when using the ZCA in a suspending position (vertically suspending installation), grease may drip.
2. The ZCA can be installed in the vertical lifting or suspending directions or horizontally. However, when installed horizontally or in a suspending position, do not allow the weight of the unit and the weight of conveyed items to be placed on the mounting bolts. Operating the unit in such a condition may result in damage to the unit. Install the unit in a manner that prevents the mounting bolts from receiving any of the load. (Figure 1)

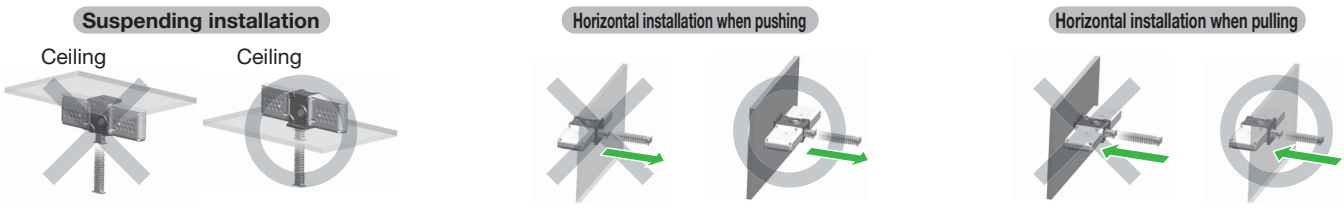

Figure 1 — Acceptable installation directions (Example)

3. When installing a model without a motor, prepare a pedestal to install a motor, speed reducer, and this unit on. The pedestal should be solid and rigid enough to sufficiently secure the alignment accuracy established during the installation even if the maximum load is applied. Install a separate mechanism to align the center heights of the motor output shaft and the ZCA input shaft. If the shaft center heights are misaligned, the force of the rotation bending will act on the motor output shaft and ZCA input shaft, leading to shaft damage.
4. If the input shaft is driven by a chain, belt, or similar device, make sure the overhang load acting on the shaft is kept within the allowable overhang load. (For details, see Selection Procedure on pages 29–30.)
5. Install the ZCA securely using four mounting holes tapped on the unit and the end fitting respectively. (Mounting bolts are not supplied with the ZCA.) Refer to Table 1 and use suitably sized mounting bolts with a rigidity of class 10.9 or higher (JIS B1051). Consider the strength of fixing parts when deciding appropriate screw-in depths.

Table 1 — Mounting bolt sizes

Model	Drive section (bottom)	Drive section (side)	End fitting
ZCA 25	M5	M5	M4
ZCA 35	M6	M6	M5
ZCA 45	M8	M8	M8

Apply thread-locking fluid when installing.

6. Never use the stroke end of the chain as a stopper. Doing so may cause serious damage to the inside of the main body.
7. Install the unit so that the load put on the main body will act on the shaft placed in the same travelling direction as that of the Zip Chain. If the direction of action or position is not correct, the Zip Chain may receive bending loads or lateral loads that can damage the unit. (Figure 2)
   Be sure to mount a linear guide in the direction of travel so that the Zip Chain is not subjected to direct lateral loads or to bending/twisting moments.
8. A Zip Chain consists of two lengths of chain whose links engage with each other to form a column. Some twisting or warpage may occur in this column.
9. Include adequate leeway with the stroke used. If the actual stroke exceeds the determined range, it may damage the stopper, cause the chain to come off, or cause the end fitting to collide with the drive section, damaging the unit.
10. Set the limit switch installed to control the stroke with consideration for inertia.

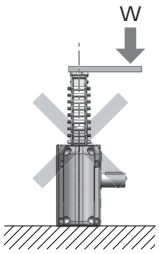

Figure 2

11. Check the rotational direction of the input shaft and the traveling direction of the Zip Chain beforehand. (Refer to the external dimensional diagrams.)
    An incorrect rotational direction may damage the unit.
    When the unit is equipped with a motor, please note that the traveling direction of the chain in relation to the electrical wiring varies depending on the speed.
12. Ensure that foreign substances such as dust and hot chips do not attach to or enter the Zip Chain or the opening of the drive section. These substances will accelerate wear in the unit and may lead to serious trouble such as chain fracture or damage to moving parts.
13. If the ZCA is installed using the bottom surface of the drive section, then the keyway of the input shaft will face almost perfectly upward at the stroke lower limit (see Figure 3). However, if synchronized, a small amount of displacement will occur due to individual differences in backlash and so on. To prevent this, install a separate mechanism that adjusts the phase.
    Phase misalignment will result in increased load per ZCA unit, leading to chain buckling, shaft damage, and other problems. When aligning phase, use a Tsubaki Power-Lock® or similar item, and align the phase with the height of the fitting when the Zip Chain is at its lowest position.
14. When a ZCA is used in equipment hung from above, install a safeguard and safety fence as a precautionary measure against chain fracture, and refrain from entering the area beneath the suspended objects. Tsubaki will not be able to manufacture or sell ZCA units in situations where there is a risk of injury to people.

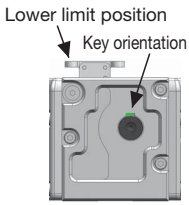

Figure 3

15. Using bellows intended for vertical lifting or handing installation with horizontal lateral installations or horizontal longitudinal installations will shorten the service life of the bellows.
    If bellows are needed in horizontal lateral or longitudinal installations, be sure to use bellows that incorporate special parts designed for this purpose.
16. Condensation, humidity, and other factors may cause the grease to deteriorate prematurely and leak out. Consult Tsubaki if the unit will be used in a special environment.
17. Do not modify the Zip Chain Actuator.

Operating Precautions

1. Confirm that all the loads acting on the ZCA, regardless of whether they are static or dynamic, do not exceed the basic capacity, permissible input shaft torque, or allowable overhang load. (For details, see Selection Procedure on pages 29–30.)
2. Install a shock absorber if necessary to protect the unit from direct impacts.
3. A gear motor, servomotor, or similar device can be used as the drive source. Because this unit has extremely high efficiency, the motor may reverse depending on the applied load. Be sure to use a brake or brake motor to prevent reversing caused by inertia or load. Use a highly-responsive brake with a braking torque of 150% or more.
4. When the mean unloaded operating torque makes up 25% or more of the required input torque, the torque fluctuation caused by chain engagement increases and the chains becomes larger. For smooth operation of the unit, select a model by increasing the mean unloaded operating torque by half.
5. Although the mean unloaded operating torque may become high for some time after the first use of the unit, this is part of the bedding-in process. Use the unit as it is. Meanwhile, the torque will gradually even out.
6. On models without a motor, the duty factor (%ED) [Operating time / (Operating time + Rest time)] conforms to the capabilities of the drive source since it is dependent on the motor or equipment providing input.
7. When using in equipment that will transport people, install a protection device on the equipment side to ensure safety. Operating the equipment recklessly may lead to accidents resulting in injury or death, or damage to the equipment.
8. When using in lifting applications, install a safety device on the equipment side to prevent sudden drops. Sudden equipment drops may lead to accidents resulting in injury or death, or damage to the equipment.
9. When using in suspending applications, always install a safety device in case the chain breaks. In addition to installing a safety fence, never pass underneath suspended items.
10. Do not use the built-in mechanical brake for braking even when using a servomotor and stopping in an emergency. Be sure to use control logic that activates the mechanical brake after deceleration by the dynamic brake. For details, refer to the motor manufacturer's instruction manual.

Maintenance Precautions

1. The Zip Chain and the drive section have been lubricated with grease in advance, and the unit is delivered ready to use. For maintenance, use the recommended grease shown in Table 2. The lubrication cycle in normal use is generally 1 year. However, this will differ according to frequency and conditions of use. See Table 3 for a lubrication cycle guide.
2. When lubricating the Zip Chain, first remove the old grease with a brush or the like, and then evenly apply grease directly to the entire Zip Chain also with a brush or the like.

Table 2 — Recommended grease

Section to apply	Manufacturer	Grease name
Zip Chain and drive section	Showa Shell Sekiyu K. K.	* Shell Alvania EP Grease 2
	Idemitsu Kosan Co., Ltd.	Daphne Eponex SR No.2
	EMG Lubricants G.K.	Mobilux EP 2
	JXTG Nippon Oil & Energy Corporation	EPNOC AP(N)2

* This grease is applied before shipment.
★ The product names above are trademarks or registered trademarks of their respective companies.

Table 3 — Lubrication cycle reference

Frequency of use per day	Lubrication cycle		
Model	ZCA 25	ZCA 35	ZCA 45
2000 to 2700 times	6 months	4 months	1.5 months
1000 to 2000 times	8 months	5 months	2 months
1 to 1000 times	12 months	12 months	3.5 months

As a guideline, greasing should be performed about every 500,000 cycles for ZCA25, every 350,000 cycles for ZCA35, and every 100,000 cycles for ZCA45.
Apply the grease according to either the lubrication cycle or the frequency of use, whichever comes first.

Examples of Special Support for Motors

Global Series

The Global Series is a motor that complies with international directives, standards, and systems.
Tsubaki provides motors that comply with CE standards for Europe, UL standards for North America, and CCC standards for China.
We also offer the TRIPLE200, which complies with all three standards—CE, UL, and CCC—in a single motor.

▶CE compliance

Products destined for the European market cannot be exported unless they are marked with a CE mark proving that they comply with the safety requirements defined by the European CE directive.
A product is considered CE-compliant if it has the CE mark affixed to the product itself as proof of compliance with the CE directive.

▶Declaration of Conformity

Tsubaki has prepared the necessary self-conformance declarations for CE compliance.
Applicable directive: Low Voltage Directive 2014/35/EU
Applicable standard: EN60034-1 (motor-related standard)

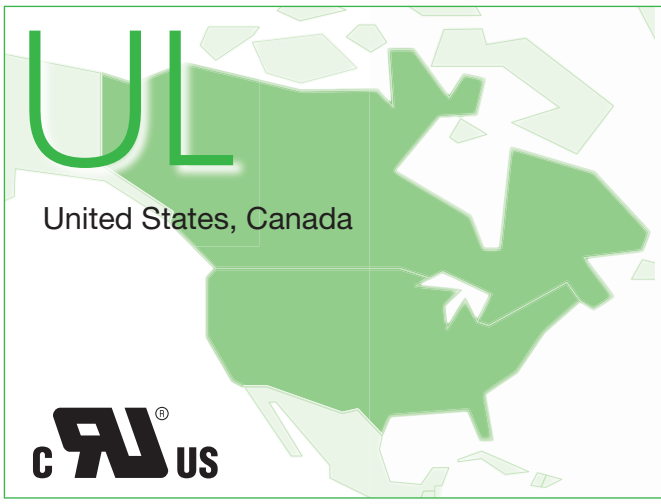

▶UL compliance

UL is the abbreviation for “Underwriters Laboratories Inc.” and represents the safety testing standard used in the United States.
A product is considered UL-compliant if it has the UL mark affixed to the product itself as proof of compliance through the use of a UL-compliant motor. A product marked with the C-UR mark indicates compliance with both UL and CSA standards.

▶UL specifications

Applicable standard: UL1004
UL File No:E225995

▶CCC compliance

The CCC mark is a compulsory certification system used in China. Any small-power motors of 1.1 kW or less being exported to China must display a CCC mark to indicate compulsory certification.

▶CCC mark licensing

The CCC mark indicates that certification has been obtained from the China Quality Certification Center (CQC).
National standard: GB12350

Technical Sheet

Inquiry Sheet

ZIP CHAIN ACTUATOR® Inquiry Sheet

Company: Address:

Department: Phone: Fax:

Contact name: E-mail:

First To ensure proper safety is being observed, we request customers to notify us in advance if the device will be used in any of the following applications.
Make sure to place a " ✓ " symbol in the checkbox for applicable items.

☐ Nuclear power ☐ Amusement machines ☐ Suspending applications ☐ Personnel transporting ☐ Vehicles ☐ Food industry

Usage Conditions

(1) Equipment: **(2) Applications:**

(3) Number of synchronized ZCA units: unit **(4) ZCA mounting direction:** Vertical lifting Horizontal Suspending*

* Completing of the Safety Confirmation Sheet will be required for suspending installations.

(5) Load characteristics: Smooth motion with no impact 1.0 1.1 1.2 1.3

: Operation with light impact 1.3 1.4 1.5

(6) Total weight of conveyed objects: kg **(7) Temperature of operating environment:** ℃

(8) Required thrust: (5) × (6) × Friction coefficient* [ ] × 9.80665 = N

* For horizontal applications only (Coefficient for vertical lifting and suspending applications: 1.0)

(9) Required stroke: mm **(10) Operating speed:** mm/sec

(11) End fitting fixing method: Fixed Other ( )

(12) Guide mechanism:

* Please provide a detailed description.
*** Be sure to install a guide mechanism.**

(13) Start-up frequency: times*/min **(14) Operating time:** hours/day days/year

* One cycle counts as two times

(15) Operating cycle: (Mainly for use when a servomotor, etc. is used.)

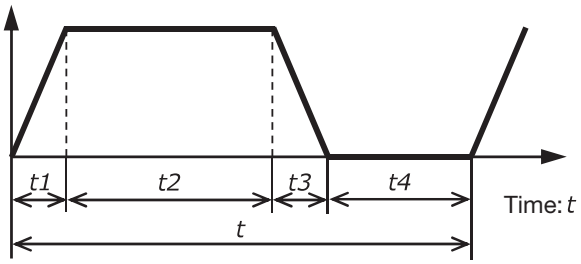

* Servo motors are to be selected at customer side.

t1	(Acceleration time):	sec
t2	(Constant speed):	sec
t3	(Deceleration time):	sec
t4	(Shutdown time):	sec
t	(Cycle time):	sec

(16) Drive section options: (Please note that some options are not available depending on combinations and ZCA sizes.)

☐ With hypoid motor (60 Hz, 50 Hz)
☐ Input shaft on opposite side
☐ Mounting base
☐ Cap
☐ Bellows
☐ Dual shafts
☐ Bottom mounting base
☐ Grease plates
☐ Other [ ]

Equipment operation and usage information (Please specify layout, operation, and other detailed information.)

For Safe Use of the ZIP CHAIN ACTUATOR®

⚠ WARNING Observe the items below to prevent danger.

- Do not release the brake when a load is acting on the unit under any circumstances. If the brake is released while a load is acting on the unit, the supported object may fall or the moving sections may suddenly start to move.
- Do not use the unit in an explosive atmosphere. Doing so may cause the unit to become flammable, explode or catch fire, or result in personal injury.
- When using in equipment that will transport people, install a protection device on the equipment side to ensure safety. Operating the equipment recklessly may lead to accidents resulting in injury or death, or damage to the equipment.
- When using in lifting applications, install a safety device on the equipment side to prevent sudden drops. Sudden equipment drops may lead to accidents resulting in injury or death, or damage to the equipment.
- When using the unit in equipment hung from above, install safety fence to prevent entering the area beneath any suspended objects. A safeguard must also be installed just in case the chain breaks.
- Keep hands and any other part of the body, clothes or accessories away from any movable parts. Otherwise, they may be entangled or trapped in movable parts, resulting in personal injury or death and/or damage to the equipment.
- If a terminal box is used, do not operate the unit with the terminal box cover removed. Doing so may result in electrical shock. Be sure to replace the cover after performing any work on the terminal box.
- When operating manually from a manual operation shaft, be sure to operate according to the instruction manual and with no load applied.
- Observe the general standards stipulated in Part 2, Chapter 1, Section 1 of the Ordinance on Industrial Safety and Health.
- For attachment/removal from equipment, transportation, installation, wiring, operation, maintenance and inspection of the unit:
  - Always work by following the instructions in the instruction manual.
  - Work must be performed by those who have specialized knowledge and skills. Otherwise explosion, ignition, fire, electrical shock, injury or damage to the equipment may result.
  - During electrical wiring, always observe the precautions listed in the instruction manual as well as the regulations in the electrical equipment standards and indoor wiring regulations. Grounding in particular is important for preventing electrocution, so always ensure that the product is reliably grounded.
  - Turn off the source power supply in advance and ensure that the switch cannot be unintentionally turned on. In the event of power stoppage, take the same action.
  - Wear clothing suited to the work, and wear appropriate protective gear (safety goggles, gloves, safety footwear, or other necessary safety equipment).
- Do not attempt to modify the unit.

⚠ CAUTION Observe the items below to prevent accidents.

The device details described in this catalog are intended primarily for model selection. Before using the device, read the instruction manual thoroughly, and ensure the device is used correctly.

- Do not use the unit outside of the specified ranges listed on the nameplate and external diagrams, and in the catalog. Doing so may result in injury and/or damage to the unit.
- Use the unit within the appropriate power supply voltage range. There is a risk of burning out the motor and of fire when using the unit outside this range.
- Make sure the limit switch wiring and stroke adjustment position are correct before energizing the unit.
- Check the rotational direction before incorporating the unit into any other equipment. Mounting the unit against the correct rotational direction may result in personal injury and/or damage to the unit.
- Do not insert your fingers or objects into any opening on the unit. Doing so may result in injury and/or damage to the unit.
- Functionality and performance may decrease because of part wear and the lifespan of parts. Perform periodic inspections according to the instruction manual. If the unit shows degraded functionality and performance or is damaged, immediately stop operation and contact your local supplier. Not doing so may result in electrical shock, injury or fire.
- During operation, the unit, motor, or speed reducer may heat up to a high temperature. Keep hands and other body parts from coming into contact with these devices. Failure to do so may result in burn injuries.
- Do not operate the unit with an applied load that is higher than the rated load. Doing so may result in injury and/or damage to the unit.
- Do not remove the nameplate.
- Customer alterations of the unit are outside the scope of the Tsubaki warranty. Therefore, Tsubaki assumes no responsibility for such alterations.
- Before using the device, thoroughly read the instruction manual provided with the unit, and ensure the unit is used correctly. If no instruction manual is available, use the device name and model to request an instruction manual from the distributor where the device was purchased, or from the Tsubaki sales office.
- Be sure to give the instruction manual to the end user.

Warranty

1.LIMITED WARRANTY
Products are covered by the Tsubaki warranty for up to 18 months from shipment from the factory or 12 months after the start of use (starting from the incorporation of the product into the customer's equipment), whichever is shortest. However, the warranty period may vary, depending on the usage conditions.

2. SCOPE OF WARRANTY
During the limited warranty period, a failure in a product installed, used, and maintained according to the catalog, instruction manual, or other appropriate documents, can be returned to Tsubaki for replacement or repair free of charge.
However, please note that the limited warranty covers only Tsubaki products. The following expenses will not be covered by the warranty. (Instruction manuals and other appropriate documents include any documents specially submitted to the customer.)
(1) Expenses required for removal/installation of the product from/to the customer's equipment, or for replacement or repair, or for related construction costs.
(2) Costs required to transport the customer's equipment to a repair shop.
(3) Lost profits or other extended damages due to breakdown or repair.

3. REPAIR SERVICES
Tsubaki will accept and repair products that have failed due to the following items—regardless of whether the warranty period is in effect—for a fee.
(1) The product was not installed correctly according to the instruction manual.
(2) The product was not sufficiently maintained or was handled incorrectly.
(3) The product failed due to a failure between the product and a separate device.
(4) The product structure was changed in any way, such as through modification.
(5) The product was repaired by someone other than Tsubaki or a Tsubaki-designated factory.
(6) The product was used outside the correct operating environment as stated in the instruction manual.
(7) The product failed due to a force majeure such as a natural disaster or illegal actions by a third party.
(8) The product failed due to a secondary failure resulting from a defect in a customer's device.
(9) The product failed due to parts installed at the request of the customer or due to parts used per the customer's specifications.
(10) The product failed due to a wiring failure or parameter setting error caused by the customer.
(11) The product failed as a result of reaching its normal service life according to the conditions of use.
(12) The product failed due to any damage for which Tsubaki is not responsible.

4. DISPATCHING OF TSUBAKI ENGINEERS
Service expenses such as those incurred when dispatching engineers to perform an investigation, adjustment, or trial operation of a Tsubaki product will be charged separately.

⚠ CAUTION The device details described in this catalog are intended primarily for model selection. Before using the device, read the instruction manual thoroughly, and ensure the device is used correctly.

TSUBAKIMOTO CHAIN CO.

Japan	Headquarters	+81 6-6441-0011	https://tsubakimoto.com

Global Group Companies

AMERICAS

United States of America	U.S. Tsubaki Power Transmission, LLC	+1 847-459-9500	https://www.ustsubaki.com/
Brazil	Tsubaki Brasil Equipamentos Industriais Ltda.	+55 11-3253-5656	http://tsubaki.ind.br/
Canada	Tsubaki of Canada Limited	+1 905-676-0400	http://tsubaki.ca/

EUROPE

Netherlands	Tsubakimoto Europe B.V.	+31 78-6204000	https://tsubaki.eu/
France	Kabelschlepp France S.A.R.L.	+33 1-34846365	https://kabelschlepp.fr/
Germany	Tsubaki Deutschland GmbH	+49 89 2000 133 80	http://tsubaki.de/
	Tsubaki Kabelschlepp GmbH	+49 2762-4003-0	https://tsubaki-kabelschlepp.com/
Italy	Kabelschlepp Italia S.R.L.	+39 0331-350962	https://kabelschlepp.it/
Russia	○○○ Tsubaki Kabelschlepp	+7 499-4180212	http://kabelschlepp.ru/
Spain	Tsubaki Ibérica Power Transmission S.L.	+34 911-873450	http://tsubaki.es/
United Kingdom	Tsubakimoto U.K. Ltd.	+44 1623-688-700	https://tsubaki.eu/

INDIAN OCEAN RIM

Singapore	Tsubakimoto Singapore Pte. Ltd.	+65 6861-0422/3/4	http://tsubaki.sg/
Australia	Tsubaki Australia Pty. Limited	+61 2-9704-2500	http://tsubaki.com.au/
India	Tsubaki India Power Transmission Private Limited	+91 44-7101-2000	http://tsubaki.in/
Indonesia	PT. Tsubaki Indonesia Trading	+62 21-8945-8898	http://tsubakimoto.co.id/
Malaysia	Tsubaki Power Transmission (Malaysia) Sdn. Bhd.	+60 3-5888-8275	http://tsubaki.my/
New Zealand	Tsubaki Australia Pty. Limited - New Zealand Branch	+64 9 352-2085	http://tsubaki.com.au/
Philippines	Tsubakimoto Philippines Corporation	+63 2-808-0067	http://tsubaki.ph/
Thailand	Tsubakimoto (Thailand) Co., Ltd.	+66 2-262-0667/8/9	http://tsubaki.co.th/
Vietnam	Tsubakimoto Vietnam Co., Ltd.	+84 24-6274-1449	http://tsubaki.net.vn/

EAST ASIA

Korea	Tsubakimoto Korea Co., Ltd.	+82 2-2183-0311	http://tsubakimoto-tck.co.kr/
Taiwan	Taiwan Tsubakimoto Co.	+886 3-3293827	https://tsubakimoto.com.tw/

CHINA

China	Tsubakimoto Chain (Shanghai) Co., Ltd.	+86 215396-6651/2	http://tsubaki-sh.cn/

The Tsubaki Eco Link logo is used only on products
that satisfy the standards for environmental friendliness set by the Tsubaki Group.

Distributed by:

Note: In accordance with the policy of TSUBAKIMOTO CHAIN CO. to constantly improve its products, the specifications in this catalog are subject to change without notice.
Catalog No. 985K559-1 ©2019/9 TSUBAKIMOTO CHAIN CO.